COMPACT DISC PLAYER

DP-7010

SERVICE MANUAL

KENWOOD

©1989-2 PRINTED IN JAPAN
B51-3677-00(O)2842

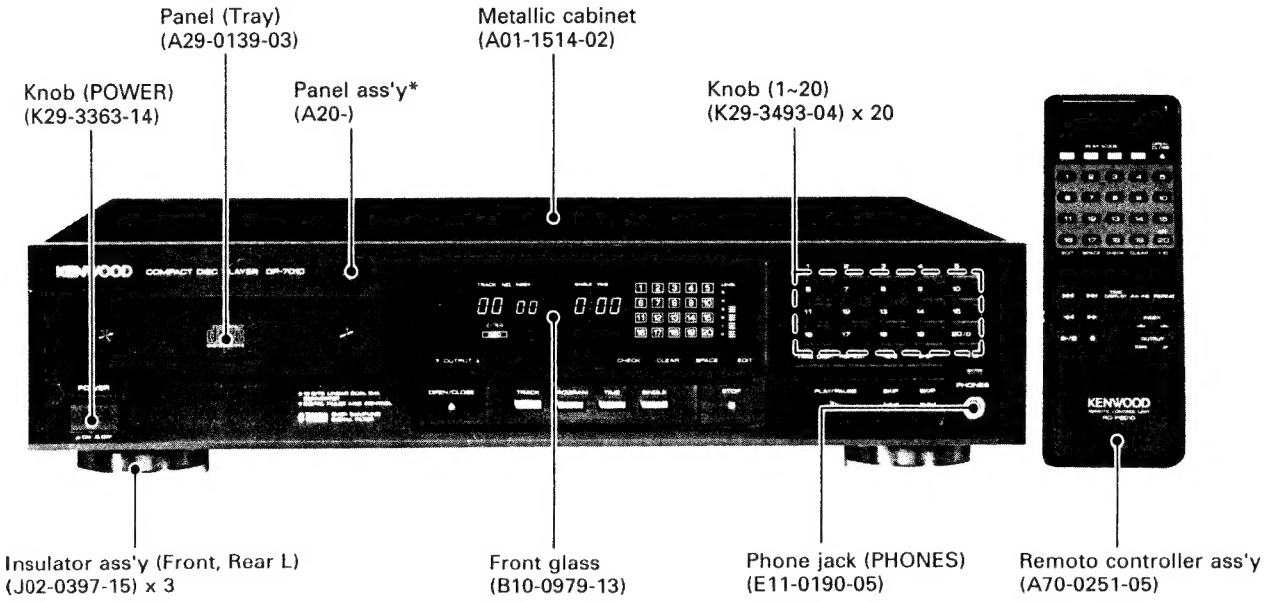

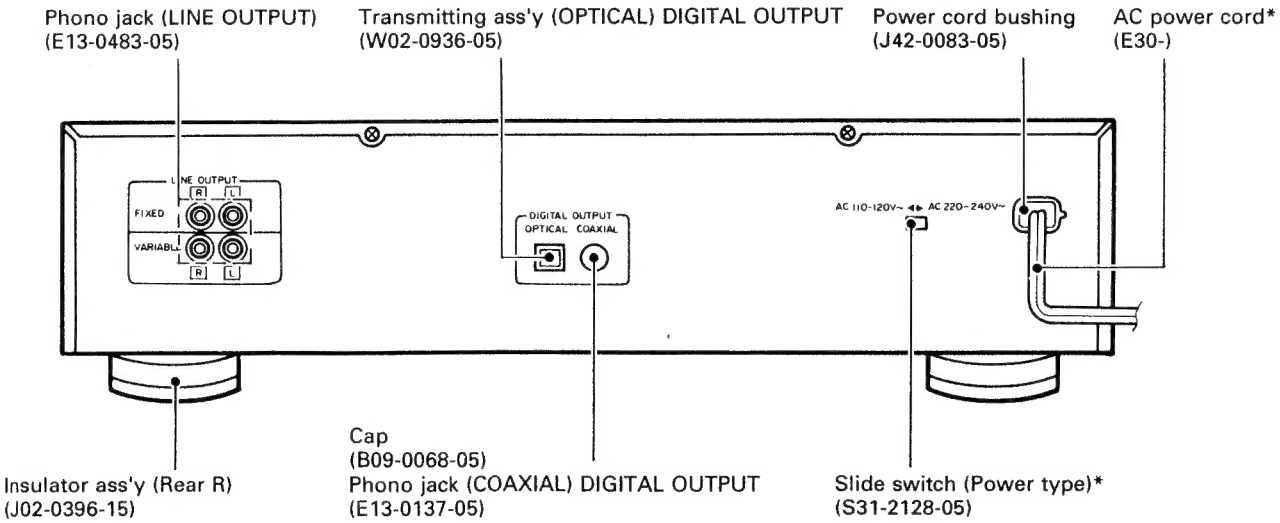

In complicance with Federal Regulations, following are reproductions of labels on, or inside the product relating to laser product safety.

KENWOOD-Corp. certifies this equipment conforms to DHHS Regulations No. 21 CFR 1040. 10, Chapter 1, Subchapter J.

DANGER : Laser radiation when open and interlock defeated. AVOID DIRECT EXPOSURE TO BEAM.

*** Refer to parts list on page 71.**

CONTENTS

CONTROLS AND INDICATORS 3
SYSTEM CONNECTIONS 4
DISASSEMBLY FOR REPAIR
1. Removing the operation unit 6
2. Removing the tray 8
3. Installing the tray 9
4. Removing the pickup 10
BLOCK DIAGRAM 11
CIRCUIT DESCRIPTION
1. Description of components 13
2. CD player unit (X32-137X-XX) 15
3. Set mode flowchart 17
4. Test mode 18
5. Microprocessor μPD75212ACW-052 (X32-137X-XX : IC16) 24
6. RF AMP. CXA1081M (X29-1890-05 : IC1) ... 26
7. Servo control CXA1244S (X32-137X-XX : IC10) 28
8. Digital signal processor CXD1125QZ (X32-137X-XX : IC20) 31
9. 18-bit serial input D/A converter PCM58P (X32-137X-XX : IC7,8) 34
10. 8x over-sampling digital filter SM5813AP (X32-137X-XX : IC14) 36
11. D.P.A.C IC TC17G008AF-8060 (X32-137X-XX : IC19) 42
MECHANISM OPERATION DESCRIPTION 46
1. Tray OPEN/CLOSE operation 47
2. Pickup chassis UP/DOWN movement 47
3. Gear installing position 48
ADJUSTMENT 49
REGLAGE 50
ABGLEICH 51
PC BOARD (COMPONENT SIDE VIEW) 55
PC BOARD (FOIL SIDE VIEW) 59
SCHEMATIC DIAGRAM 63
EXPLODED VIEW (MECHANISM) 69
EXPLODED VIEW (UNIT) 70
PARTS LIST 71
SPECIFICATIONS ..... BACK COVER

CONTROLS AND INDICATORS

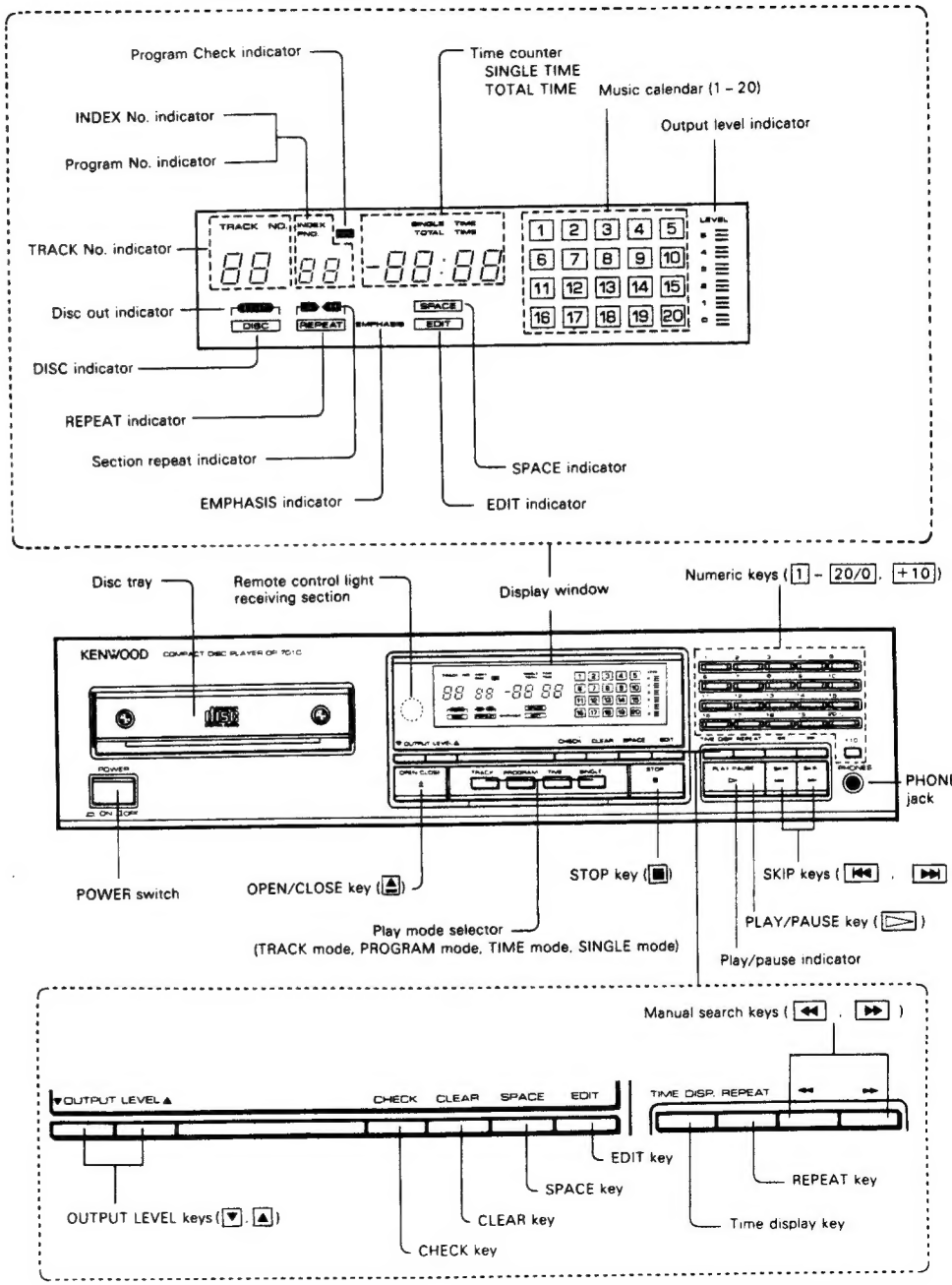

SYSTEM CONNECTIONS

Do not put the plug into the socket until the connecting is completed.
Connect having selected one of Ⓐ, Ⓑ or Ⓒ below.
Also refer to the manual for the amplifier to which the connection is to be made.

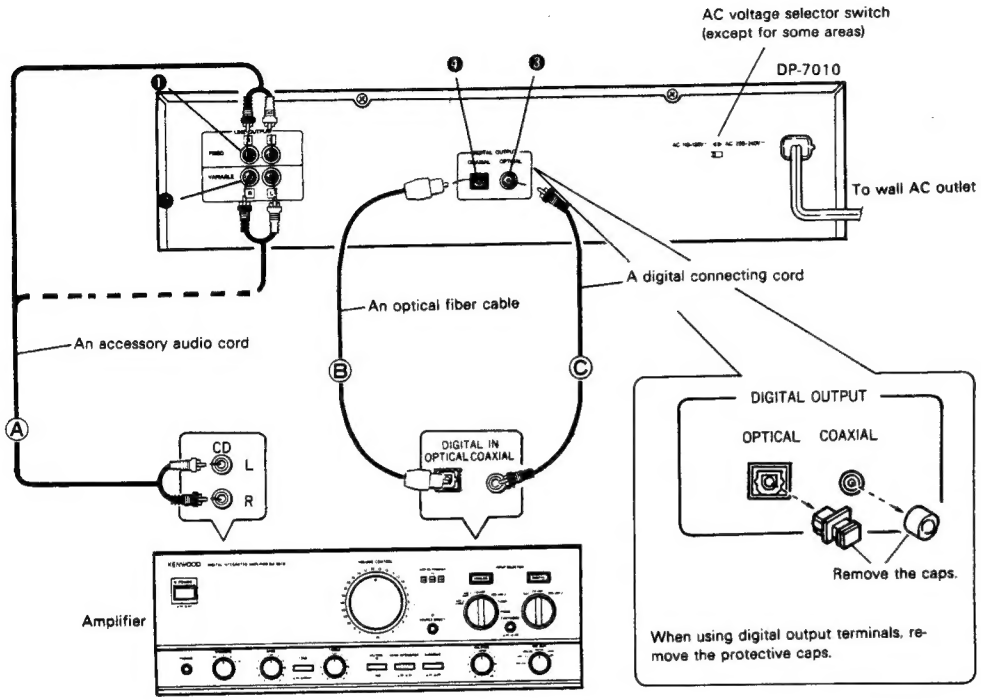

■ Conventional amplifier connection (Ⓐ)

Connect output terminal (LINE OUTPUT) ❶ or ❷ to the CD input terminal of the amplifier with the accessory audio cord supplied.

❶ Fixed output (FIXED):
Output voltage is fixed to 2 Vrms. Use these stereo output jacks for connection to a typical amplifier or receiver.

❷ Variable output (VARIABLE)
The output level of the head phones and the VARIABLE output level can be changed simultaneously by means of the OUTPUT LEVEL keys on the front (▼, ▲) or remote control.
The output levels are indicated on the display.
Use this when you want to match the output levels with other equipment.

■ Connection to an amplifier equipped with digital input (Ⓑ or Ⓒ)

Connect COAXIAL input terminal of the amplifier to the DIGITAL OUTPUT COAXIAL ❸ with a digital cord, or connect OPTICAL input terminal of the amplifier to the DIGITAL OUTPUT OPTICAL ❶ with an optical fiber cable.

❸ DIGITAL OUTPUT COAXIAL
This terminal is for outputting the audio signals in the original digital code.
Do not connect it to anything other then the digital input terminal of the amplifier because this could risk damaging the amplifier and speaker.

❶ DIGITAL OUTPUT OPTICAL
This terminal is for converting and outputting the audio signals from digital to optical.
Connect it to the digital amplifier attached to the optical input terminal. When using this terminal, remove the protective cap.

DP-7010

SYSTEM CONNECTIONS

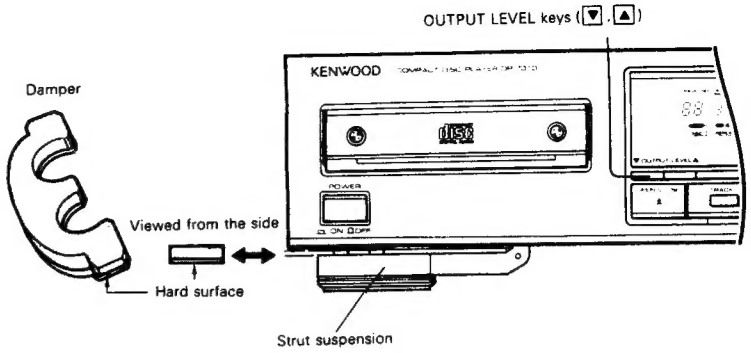

Strut suspension adjustment

Dampers are provided on the 4 legs of this unit for the strut suspension (see figure above). The suspension can be adjusted by attachment or removal of these dampers. Use them if you feel they are required for sound quality.
Turn the unit over when attaching or removing the dampers. We recommend that you do not place other components on top of this unit as it will impair the suspension effect.

■ Connecting optical fiber cable

1. **When connecting the optical cable, insert it straight until you hear it click into place.**
2. **Never bend or tie the optical fiber cable.**

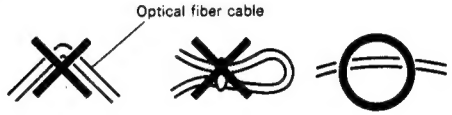

3. **Not all optical cables available on the market can be used. If you cannot connect up, consult the store where you bought it from or your nearest sales outlet.**

■ Connecting power cord

It is useful to connect the power cord for this unit to the linking power socket (SWITCHED) of an amplifier. (Except for some areas)

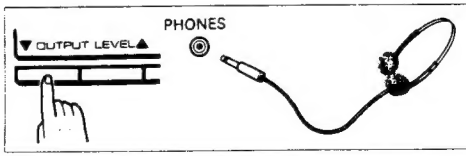

Using stereo headphones

Plug the stereo headphone into the PHONES terminal and adjust with the OUTPUT LEVEL keys ▼, ▲ to get the desired volume.

DISASSEMBLY FOR REPAIR

1. Removing of the operation unit

* Take out the case beforehand.

1. Undo the two catches (❶) of the tray panel, then detach the tray panel sliding it upwards (❷).

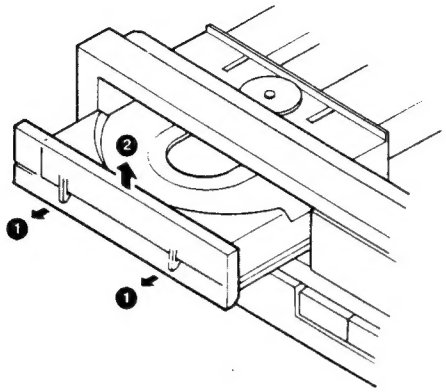

2. Push in the tray in the direction of arrow (❸).
3. Remove the four screws (❹) in the downside of the panel and the two screws (❹) in the upside of the panel, then undo the two catches (❺) in the upside, and take out the front panel in the direction of an arrow towards you.

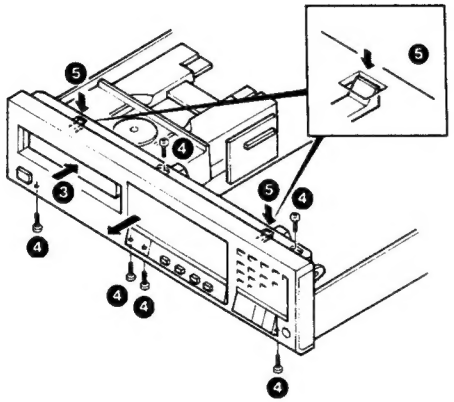

DP-7010

DISASSEMBLY FOR REPAIR

4. Remove the two screws (❻), then disconnect the flexible board (❼) and the headphone cable (❼) from their connectors on the main board, and take out the sub panel in the direction of the arrow towards you.

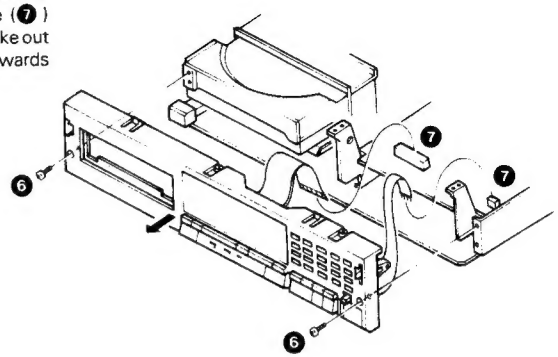

5. Remove the three screws (❽) and undo the six catches (❾), then take out the operation unit in the direction of an arrow.

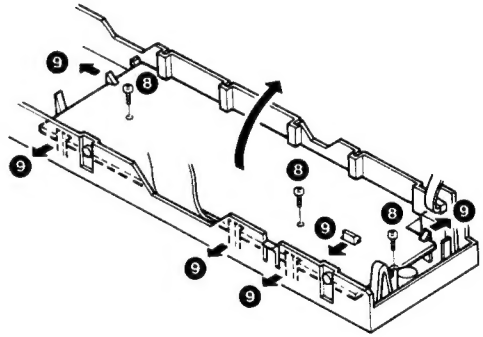

DISASSEMBLY FOR REPAIR

2. Removing the tray

1. With the tray open, turn off the power beforehand.
2. Push in the tray slowly by a hand (❶).
   In this situation, the gear is free (❷).
3. Push the tray towards you and draw out the tray (❸).

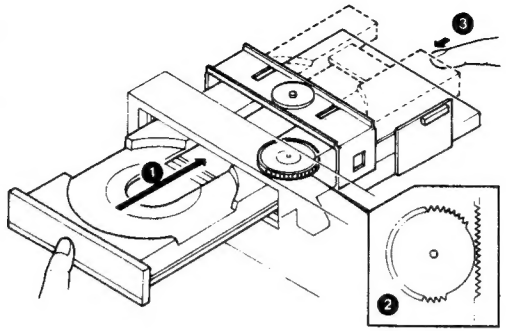

4. Push down off the two catches (❹) of the tray stopper, and draw out the tray in the direction of an arrow.

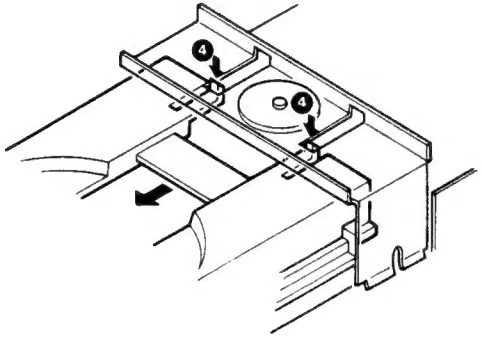

5. When removing the tray, detach it in the direction of arrow (❺) in which it can be detached without the sub panel caught by the tray stopper.

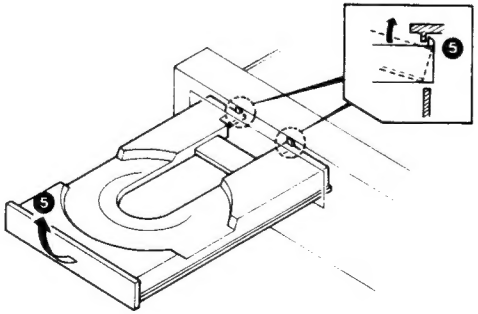

DP-7010

DISASSEMBLY FOR REPAIR

2–1. When the power is not turned on or when the tray does not come out even by pressing the OPEN key

1. Push the lever by a screwdriver, etc. put in through a slit on the bottom plate of the product as shown on the right (❶).
2. Thereby, the gear will be free with the tray slightly advanced. Thus, draw out the tray towards you (❷). Otherwise, as previously stated in step 3. of "2. Removing the tray", push the tray towards you and draw out the tray.

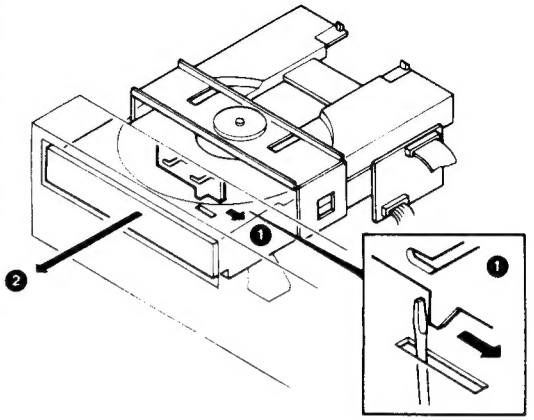

3. Installing the tray

1. Set to location (Ⓐ) the protrusion on the upper side of the gear as shown on the right.
2. Push in the tray along the left and right guides.

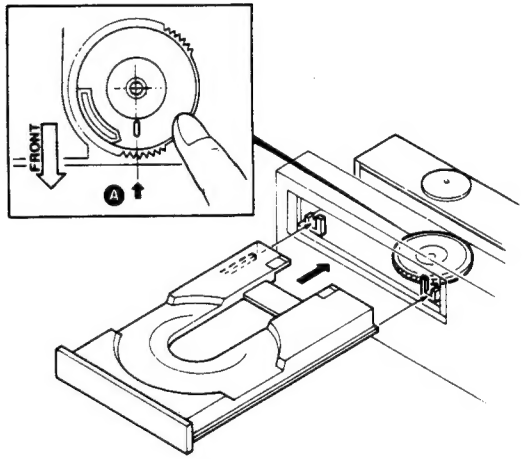

DISASSEMBLY FOR REPAIR

4. Removing the pickup

* Take out the tray beforehand.

1. Remove the two screws (❶), then take out the metal piece of the clamper in the direction of the arrow.

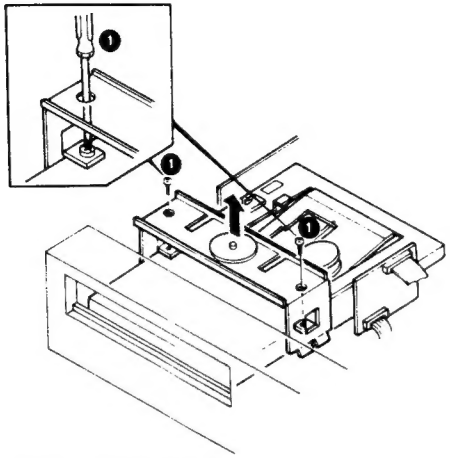

2. Remove the cut washer, then take out the gear (❷).
3. Detach the two fixtures (❸).

Note 1 : When installing the pickup

Perform the installation in such a manner that the metal piece comes into engagement with the guide section of the pickup (Ⓐ).

Separate the parallel cords running out of the pickup as much away from each other as possible (Ⓑ).

Note 2 : When replacing the pickup

As to the pickup (J91-0372-05) supplied as a service part, its LD short land (Ⓒ) is solder-shorted for the laser diode (LD) protection. Thus when replacing the pickup, unsolder the LD short land after the connection with the connector.

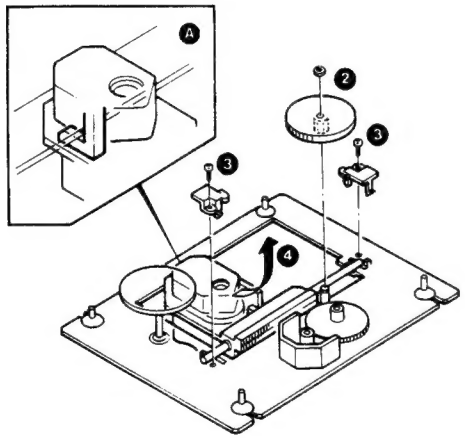

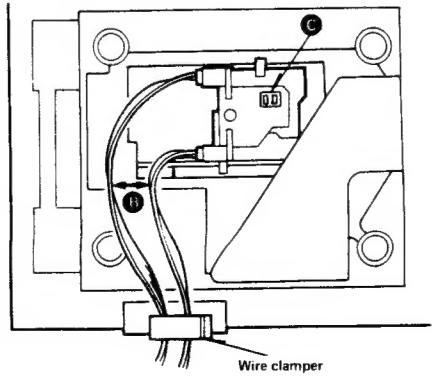

DP-7010 DP

BLOCK DIAGRA

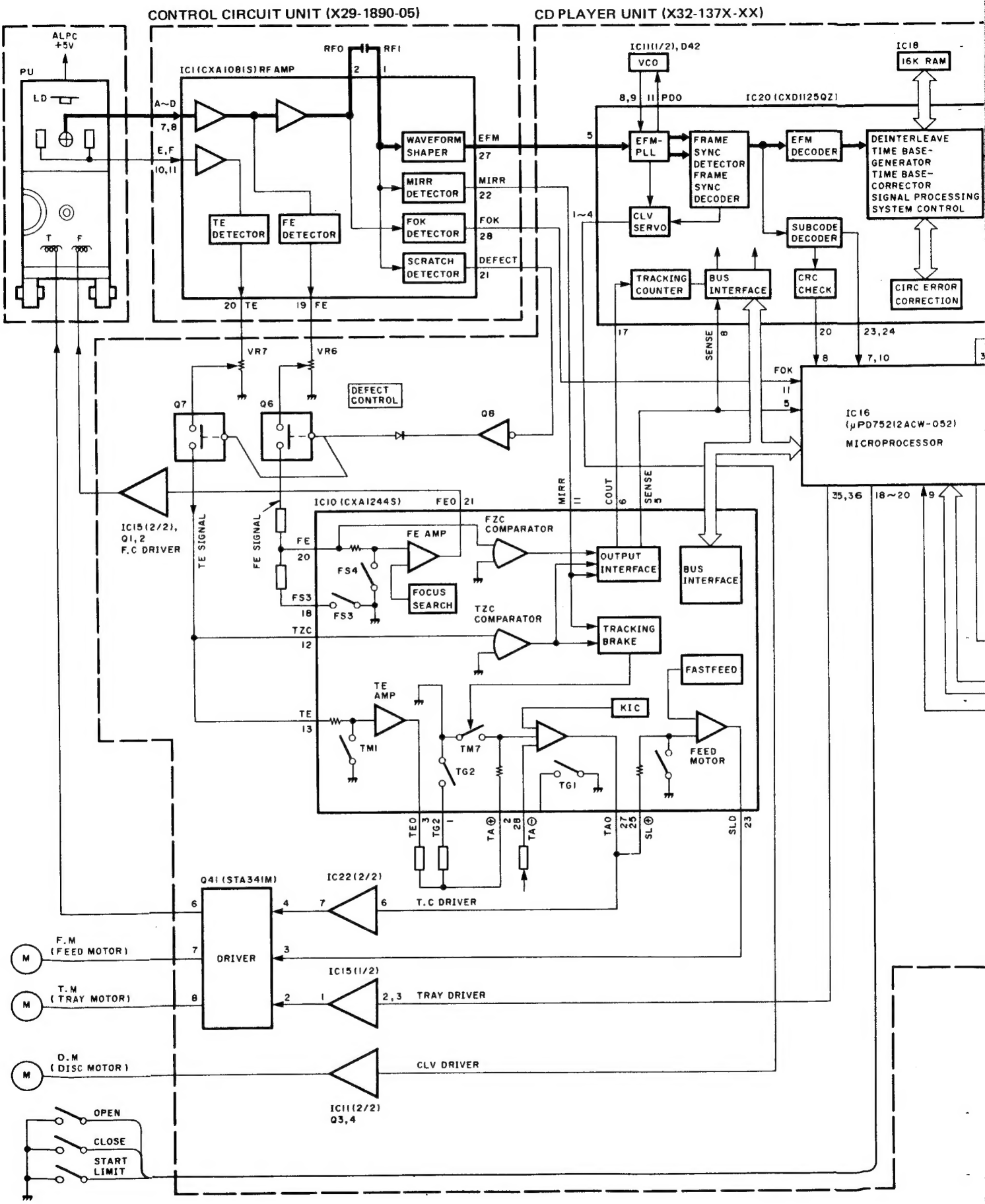

CK DIAGRAM

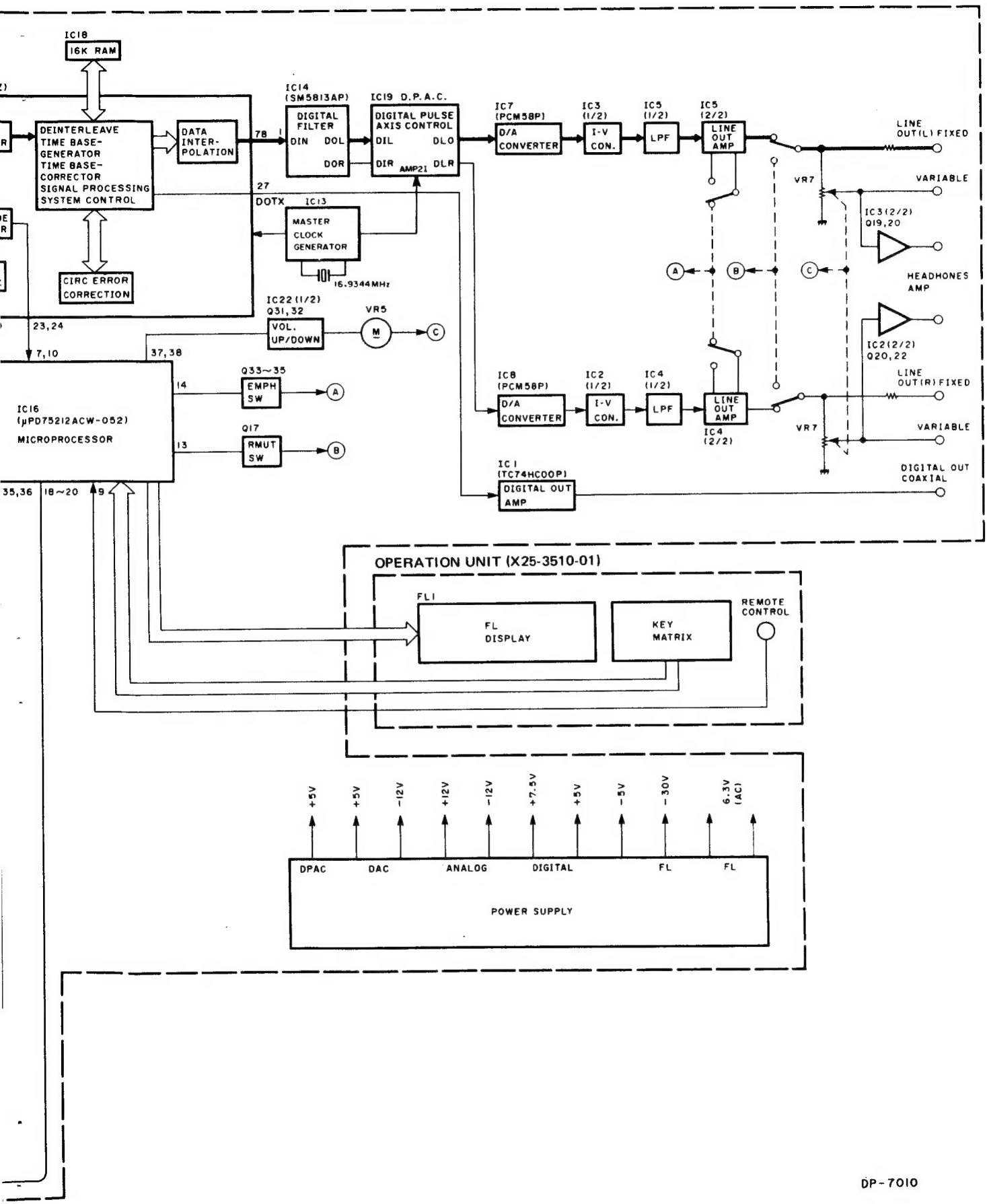
IC18
16K RAM
DEINTERLEAVE
TIME BASE-
GENERATOR
TIME BASE-
CORRECTOR
SIGNAL PROCESSING
SYSTEM CONTROL
DATA
INTER-
POLATION
CIRC ERROR
CORRECTION
IC14
(SM5813AP)
DIGITAL
FILTER
DIN DOL
DOR
IC19 D.P.A.C.
DIGITAL PULSE
AXIS CONTROL
DIL DLO
DIR DLR
AMP21
78
27
DOTX
IC13
MASTER
CLOCK
GENERATOR
16.9344MHz
IC22 (1/2)
Q31,32
VOL.
UP/DOWN
VR5
23,24
7,10
37,38
IC16
(μPD75212ACW-052)
MICROPROCESSOR
14
13
Q33~35
EMPH
SW
Q17
RMUT
SW
35,36
18~20
9
IC7
(PCM58P)
D/A
CONVERTER
IC3
(1/2)
I-V
CON.
IC5
(1/2)
LPF
IC5
(2/2)
LINE
OUT
AMP
LINE
OUT(L) FIXED
VR7
VARIABLE
IC3(2/2)
Q19,20
HEADHONES
AMP
IC2(2/2)
Q20,22
LINE
OUT(R) FIXED
VARIABLE
IC8
(PCM58P)
D/A
CONVERTER
IC2
(1/2)
I-V
CON.
IC4
(1/2)
LPF
LINE
OUT
AMP
IC4
(2/2)
IC1
(TC74HC00P)
DIGITAL OUT
AMP
DIGITAL OUT
COAXIAL
OPERATION UNIT (X25-3510-01)
FL1
FL
DISPLAY
KEY
MATRIX
REMOTE
CONTROL
+5V
+5V
-12V
+12V
-12V
+7.5V
+5V
-5V
-30V
6.3V
(AC)
DPAC
DAC
ANALOG
DIGITAL
FL
FL
POWER SUPPLY

CIRCUIT DESCRIPTION

1. Description of components

1-1. OPERATION UNIT (X25-3510-01)

Ref. No.	Part No.	Use/Function	Operation/Condition/Compatibility
IC1	LB1433N	Level meter IC	FL tube level indicator driver.
Q1	2SC3666	Ripple filter	+5.6V regulated power supply.
Q2~6	DTC124EN	Digital transistors	Level indicator selection switch.
Q7~11	2SC1740S(Q,R)	Drivers	Drivers of grids G2, G3, G4, G5 and G8.
Q12~15	2SC1740S(Q,R)	Drivers	Drivers of each mode lamp.

1-2. CONTROL CIRCUIT UNIT (X29-1890-05)

Ref. No.	Part No.	Use/Function	Operation/Condition/Compatibility
IC1	CXA1081M	RF amplifier	Generation of focus error signal, generation of tracking error signal, generation of RF signal and its phase compensation, and auto asymmetry correction.
Q1	2SA1426	LD switch	Laser diode B line supply switch.
Q2	2SC945(A)(Q,P)	FE switch	Focus error amplifier bias selection switch.

1-3. CD PLAYER UNIT (X32-137X-XX) 0-11 : K,P 0-21 : U,M,UE 2-71 : X,T,E

Ref. No.	Part No.	Use/Function	Operation/Condition/Compatibility
IC1	TC74HC00P	Digital out driver	Digital output buffer amplifier, and power ON/OFF reset signal generation.
IC2,3	NJM4565D	I-V conversion	(1/2) : Conversion of D/A converter current output into a voltage form. (2/2) : Headphone amplifier.
IC4	NJM4565D	Operation amplifier	(1/2) : Rch 20kHz LPF. (2/2) : Rch output buffer amplifier.
IC5	NJM4565D	Operation amplifier	(1/2) : Lch 20kHz LPF. (2/2) : Lch output buffer amplifier.
IC6	M5218P	Operation amplifier	Error amplifier of ±12V regulated power supply.
IC7,8	PCM58P	D/A converter	Conversion of 18-bit digital data into an analog form.
IC9	M5218P	Operation amplifier	(1/2) : Error amplifier of –12V regulated power supply. (2/2) : Error amplifier of +5V regulated power supply.
IC10	CXA1244S	Servo IC	For each of focus, tracking and sled servo controls.
IC11	NJM4558D	PLL	(1/2) : The phase comparison signal from pin 11 (PD0) of the digital signal processing LSI (CXD1125QZ) is input in try state, and this IC controls the varicap voltage by that output.
		CLV servo	(2/2) : This IC controls the disc motor speed by four outputs MON, MDP, MDS and FSW of the digital signal processing LSI (CXD1125QZ). MON ..... Disc motor ON/OFF MDP ..... Disc motor rough control and phase control MDS ..... Disc motor speed control FSW ..... Disc motor filter time constant selection
IC12	M5218P	Operation amplifier	Error amplifier of +5V regulated power supply (for IC19 (D.P.A.C)).
IC13	TC74HC04P	Clock pulse oscillation	Generation of master clock pulse (16.9344MHz).
IC14	SM5813AP	Digital filter	8x over-sampling (18-bit).
IC15	NJM4558D	Operation amplifier	(1/2) : Tray OPEN/CLOSE voltage control. (2/2) : Focus actuator phase compensation amplifier.
IC16	µPD75212ACW-052	Microprocessor	Display, each key input process and servo IC control.
IC18	CXK5816SP-15L	Static RAM	EFM demodulation data time axis correction 16K S-RAM.
IC19	TC17G008AF-8060	D.P.A.C	Digital Pulse Axis Control (Refer to page 42.).
IC20	CXD1125Q CXD1125QZ	Digital signal processing IC	Bit clock pulse regeneration by EFM-PLL circuit, EFM data demodulation, and frame sync signal detection, protection and interpolation.
IC22	NJM4558D	Operation amplifier	(1/2) : Electrically driven VR up/down voltage generation. (2/2) : Tracking actuator drive buffer.

DP-7010

CIRCUIT DESCRIPTION

Ref. No.	Part No.	Use/Function	Operation/Condition/Compatibility
Q1	2SB941	Driver	Focus actuator drive current booster.
Q2	2SC3940A	Driver	Focus actuator drive current booster.
Q3	2SD1266(Q,P)	Driver	Disc motor drive current booster.
Q4	2SA1534A	Driver	Disc motor drive current booster.
Q5	DTC124EN	Switch	Controls the bias switch of the focus error signal by signal SENS, and also controls the focus gains FS3 of the servo IC.
Q6	2SK246(Y,GR)	Switch	Controlled by the defect control switch (Q8). When flaw is detected, Q6 turns OFF to open the focus servo loop.
Q7	2SK246(Y,GR)	Switch	Controlled by the defect control switch (Q8) in the same manner as Q6. When flaw is detected, Q7 turns OFF to open the tracking servo loop.
Q8	2SA733(A)(Q,P) 2SA933S(Q,R)	Switch	Controls the defect detection switch, and the switches Q6 and Q7 for focus and tracking errors. When flaw is detected : OFF, At normal play : ON (Inverted logic of signal DEFECT)
Q9	2SC945(A)(Q,P) 2SC1740S(Q,R)	Switch	Inputs the tracking error signal to pin ATSC (anti-shock) through BPF to prevent sound jump due to shock by external disturbance.
Q10	2SA733(A)(Q,P) 2SA933S(Q,R)	Power supply	FL tube reference voltage supply (–30V).
Q11	2SA1534A	Power supply	FL tube reference voltage supply (–30V).
Q12	2SA733(A)(Q,P) 2SA933S(Q,R)	Power supply	–5V digital power error amplifier.
Q13,14	2SA954(L,K)	Ripple filter	For –5V regulated power supply.
Q15,16	2SC945(A)(Q,P) 2SC1740S(Q,R)	Reset	Power ON/OFF reset pulse generation.
Q17	2SA733(A)(Q,P)	Switch	Output muting relay driver.
Q18	2SC2003(L,K)	Ripple filter	For +12V regulated power supply.
Q19	2SC2003(L,K)	Driver	Headphone amplifier driver (Lch).
Q20	2SC2003(L,K)	Driver	Headphone amplifier driver (Rch).
Q21	2SA954(L,K)	Driver	Headphone amplifier driver (Lch).
Q22	2SA954(L,K)	Driver	Headphone amplifier driver (Rch).
Q30	2SA954(L,K)	Ripple filter	For –12V regulated power supply.
Q31	2SC3666	Driver	Electrically driven VR current booster.
Q32	2SA1426	Driver	Electrically driven VR current booster.
Q33,34	2SC2878(B)	Switch	De-emphasis switch, which is controlled by digital transistor Q35. (De-emphasis "H" : ON)
Q35	DTA124EN	Digital transistor switch	Controlled by pin 14 of microprocessor. (At emphasis : ON)
Q36	2SB722(Q,P,E)	Ripple filter	For +5V regulated power supply.
Q37	2SC2003(L,K)	Ripple filter	For +5V regulated power supply (for D.P.A.C).
Q38	2SD1266(Q,P)	Ripple filter	For +5V regulated power supply.
Q39	2SD1266(Q,P)	Ripple filter	For +7.5V regulated power supply.
Q40	2SC2003(L,K)	Ripple filter	For –12V regulated power supply.
Q41	STA341M	Driver	(1/3) : Tray motor driver. (2/3) : Feed motor driver. (3/3) : Tracking coil driver.

CIRCUIT DESCRIPTION

2. CD player unit (X32-137X-XX)

• D.P.A.C (Digital Pulse Axis Control) circuit

Two different distortions are attendant on the conversion of the digital signal into an analog signal. One is a distortion on the level axis (voltage axis), which is determined mainly by the resolution of the D/A converter, and in case of using a ladder resistor type, by its error.

The other is a distortion on the time axis, which is not so prevailing as to appear on the distortion meter but has great influence on the sound quality. It is the D.P.A.C that is to operate as a circuit to improve this point.

Figure 2-1 shows the error (distortion) on the voltage axis of the D/A converter output for the original sound, and Figure 2-2 shows the error (distortion) on the time axis of the D/A converter output for the original sound.

As seen from this, even with a variation in time axis, there appears a regenerated waveform different from the original sound.

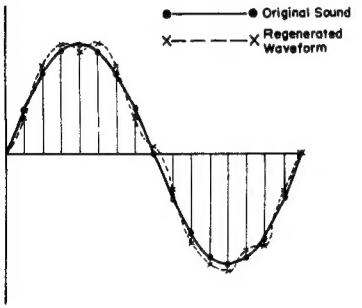

Fig. 2-1 Error (distortion) on voltage axis

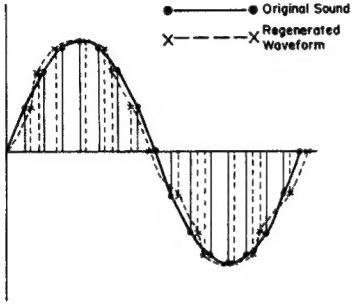

Fig. 2-2 Error (distortion) on time axis

Next, let us deal with the theory of the D.P.A.C operation by a basic D.P.A.C circuit of this time.

Also when the latch signal Ⓐ from the digital filter is disturbed, an accurate latch signal like Ⓒ can be obtained at the rise of the master clock pulse Ⓑ. By virtue of this latch signal, a proper voltage signal is output from the D/A converter.

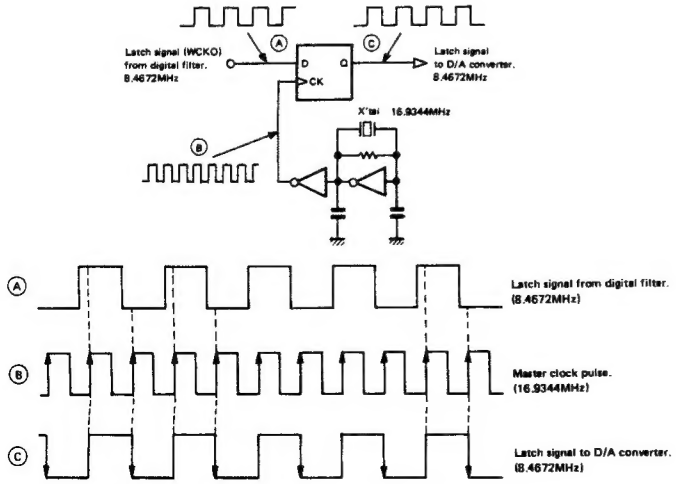

Fig. 2-3 D.P.A.C basic circuit

CIRCUIT DESCRIPTION

Let us show the signal timing in a practical circuit.

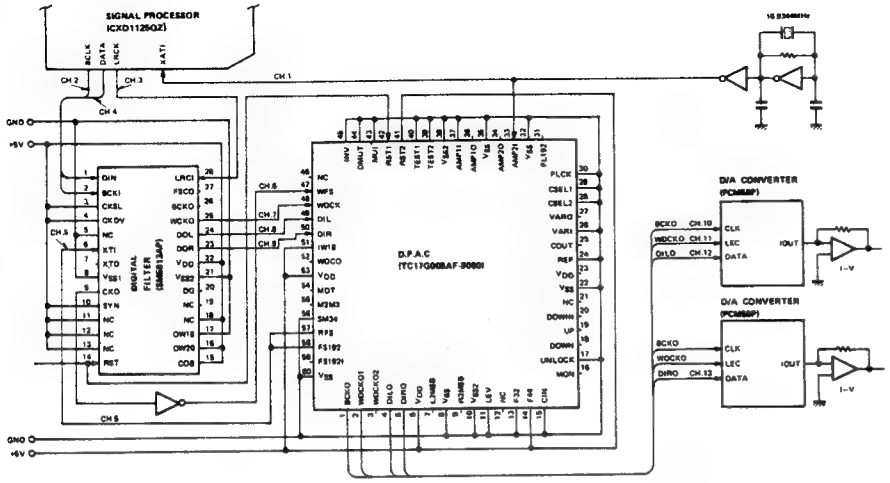

Fig. 2–4

Signal : 1kHz, 0dB (at play)

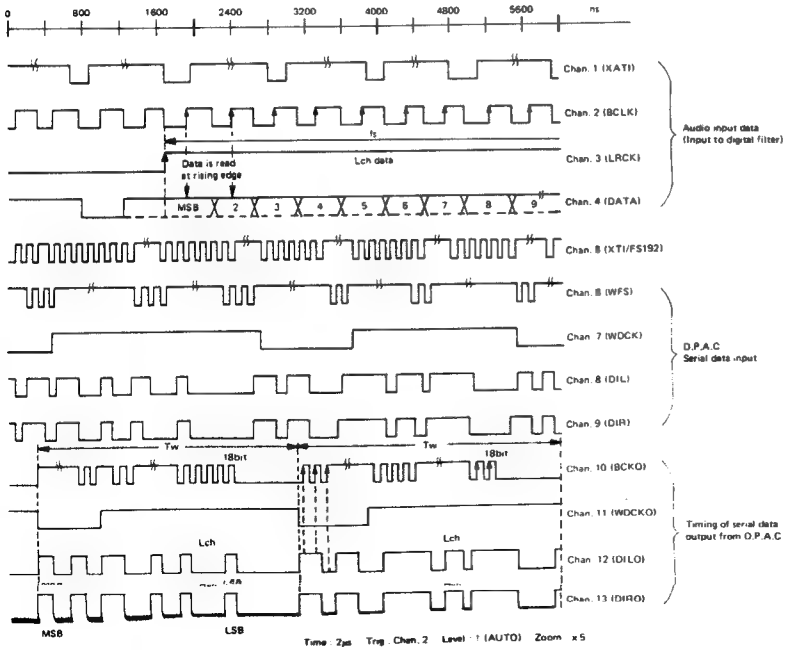

Fig. 2–5 D.P.A.C timing chart

DP-7010

CIRCUIT DESCRIPTION

3. Set mode flowchart

3–1. Outline after POWER ON

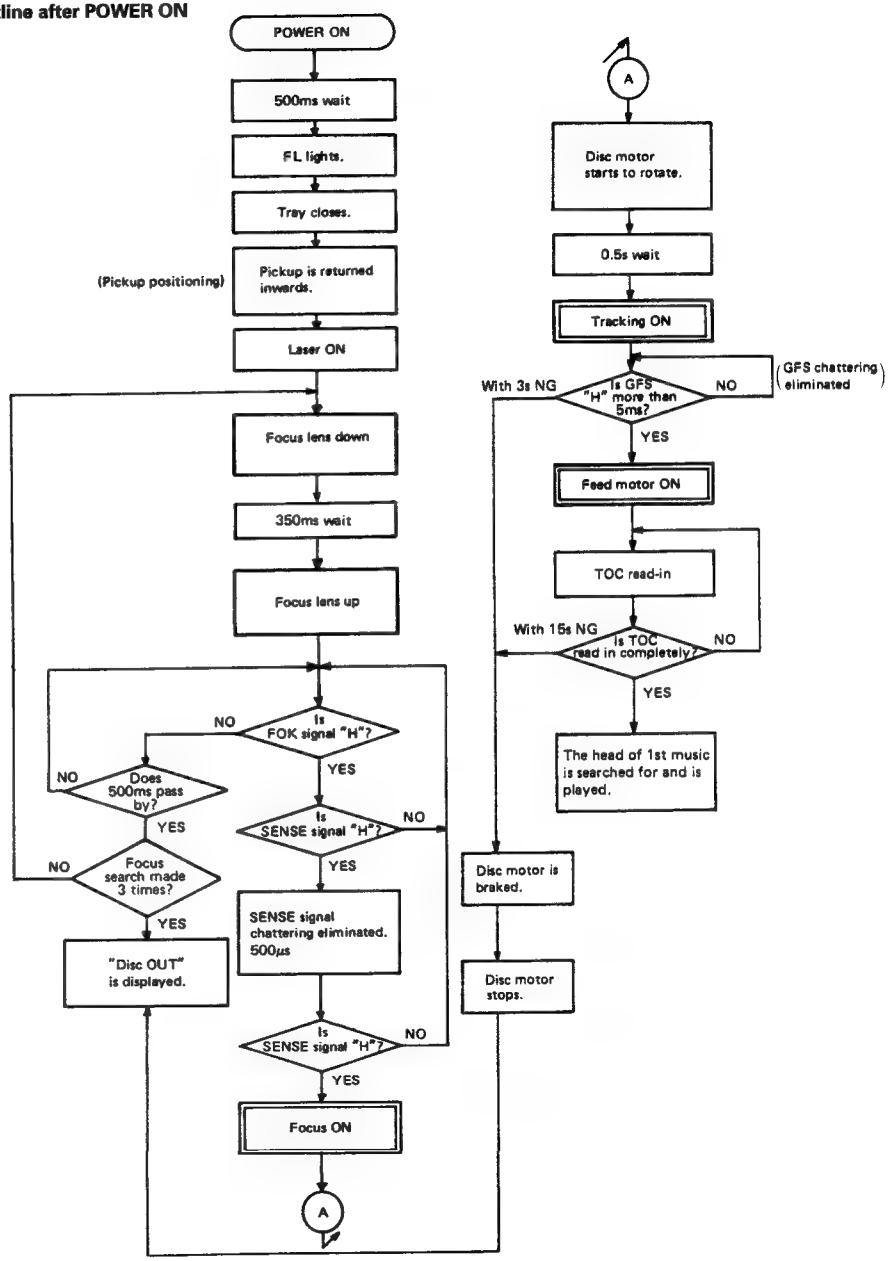

CIRCUIT DESCRIPTION

4. Test mode

4–1. Setting the test mode

Unlike previous models, this microprocessor can be put to the test mode by just short-circuiting the test pins even in the set mode (normal condition). (However, the disc must be present in the unit.)

The test mode can also be initiated with the previous method, i. e. by switching the power on with the test pins short-circuited.

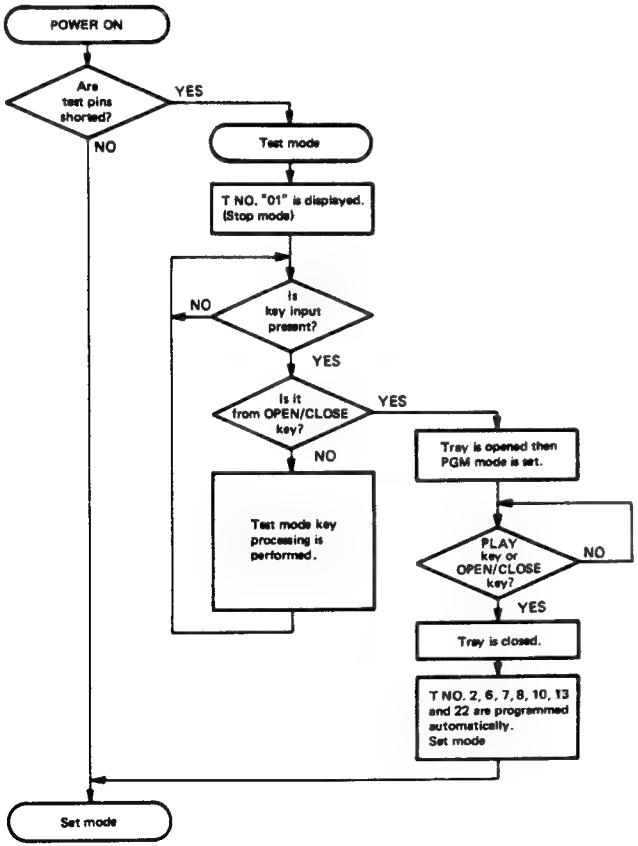

DP-7010

CIRCUIT DESCRIPTION

4–2. Key and functions valid in thst mode

No.	Input key	Function	Track No. display
1	PLAY	(1) Focusing servo . . . . . ON. (2) Tracking servo . . . . . ON. (3) Feed servo . . . . . ON.	05 ↓ Displayed for a few seconds after completion of (1), (2) and (3). ↓ Disc Track No. is displayed.
2	CHECK	(1) Focusing servo . . . . . ON. (2) Tracking servo . . . . . OFF. (3) Feed servo . . . . . OFF.	03
3	CLEAR	(1) Focusing servo . . . . . ON. (2) Tracking servo . . . . . ON. (3) Feed servo . . . . . OFF.	04
4	STOP	(1) Focusing servo . . . . . OFF. (2) Tracking servo . . . . . OFF. (3) Feed servo . . . . . OFF.	01
5	REPEAT	(1) Tray . . . . . Opened. (2) Laser . . . . . ON. The REPEAT function is canceled when the tray is closed by pressing the tray. The Track No. display 01.	02
6	▶▶	In the STOP mode, moves the pickup slightly toward the outer position of disc. When feed servo is ON, sets the track gain to "H".	
7	◀◀	In the STOP mode, moves the pickup slightly toward the inner position of disc. When feed servo is ON, sets the track gain to "L".	
8	▶▶|	Turns all FL display lamps ON.	
9	|◀◀	Turns all FL display lamps OFF.	
10	Numeric key (0 ~ 9)	Jumps tracks as shown below.	
11	OPEN/CLOSE or +10	When the tray is opened then closed, Track No. 2, 6, 7, 8, 10, 13 and 22 are programmed and the test mode is canceled.	
12	P. MODE	Track No. 2, 6, 7, 8, 10, 13 and 22 are programmed and the test mode is canceled.	

Key	1	2	3	4	5
Number of tracks	1	4	16	32	1000
Direction	Outer				
Key	6	7	8	9	0
Number of tracks	1	4	16	32	1000
Direction	Inner				

CIRCUIT DESCRIPTION

4–3. Flowchart of test mode

• Flowchart from tray OPEN status after power ON

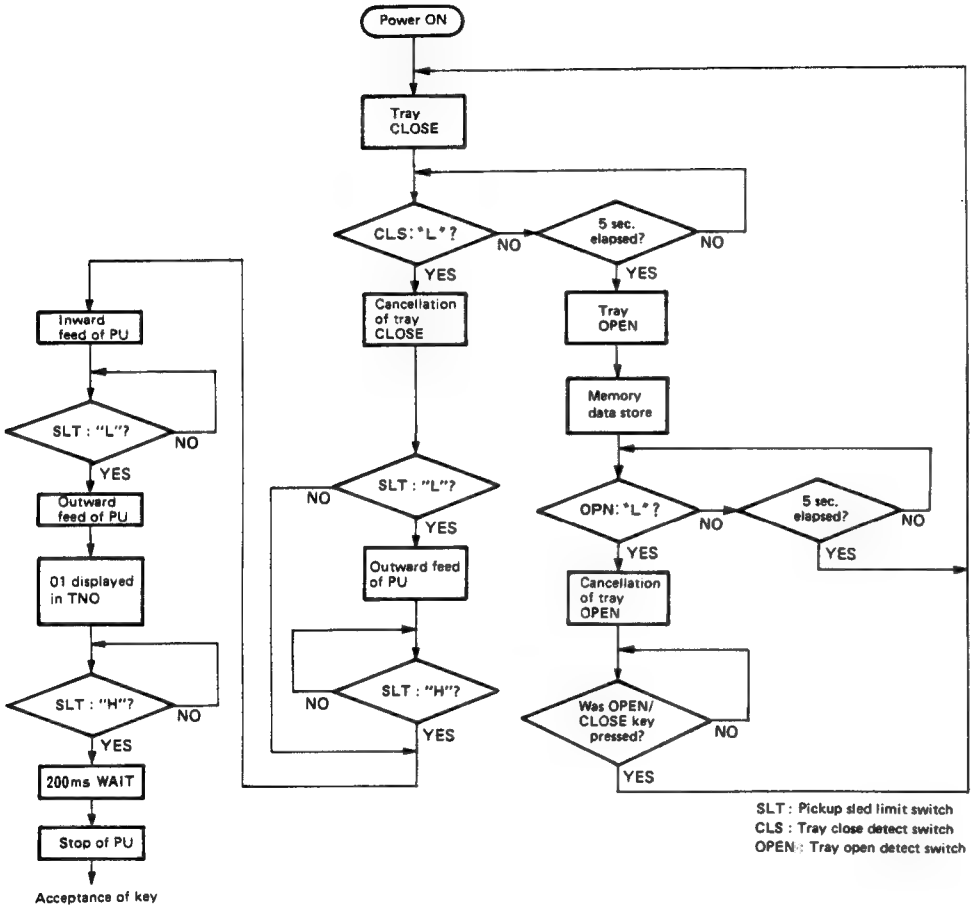

CIRCUIT DESCRIPTION

• Focus search & focus servo ON

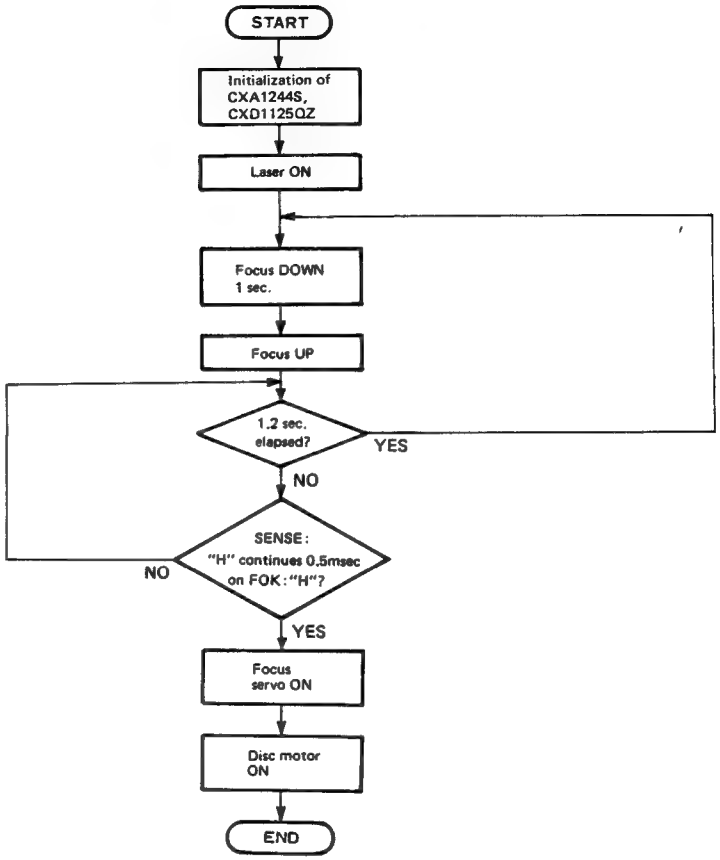

CIRCUIT DESCRIPTION

• Tracking servo ON

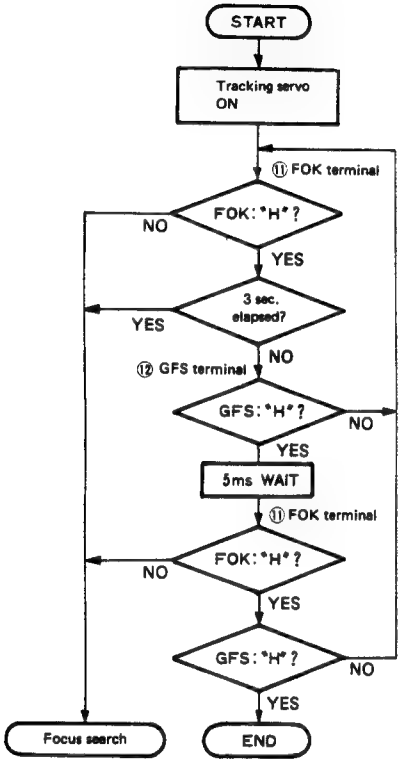

• Disc motor STOP

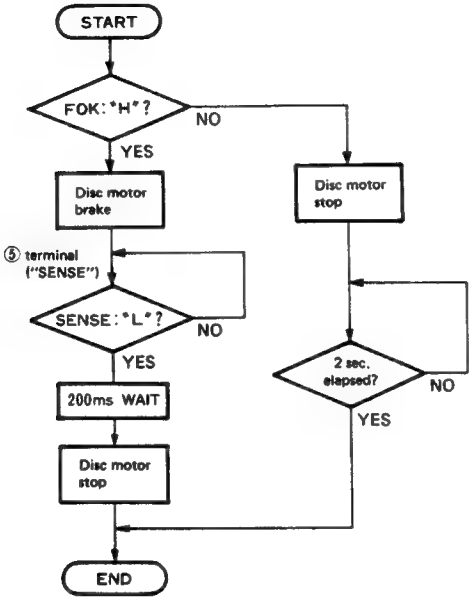

DP-7010

CIRCUIT DESCRIPTION

• From loading of Q data to display

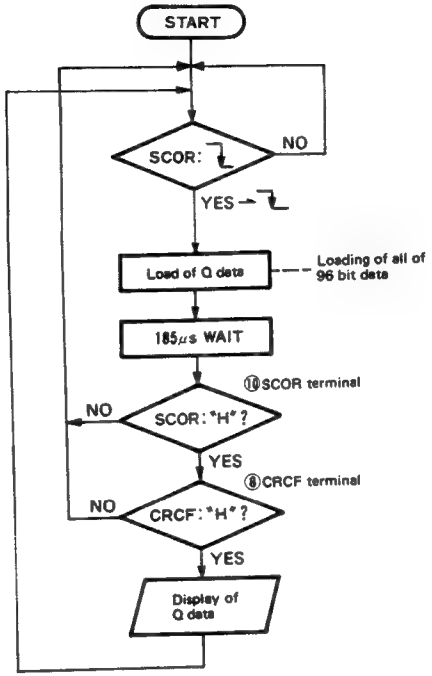

• In a usual case, since the tray was pushed when the tray is OPEN until STOP display is made.

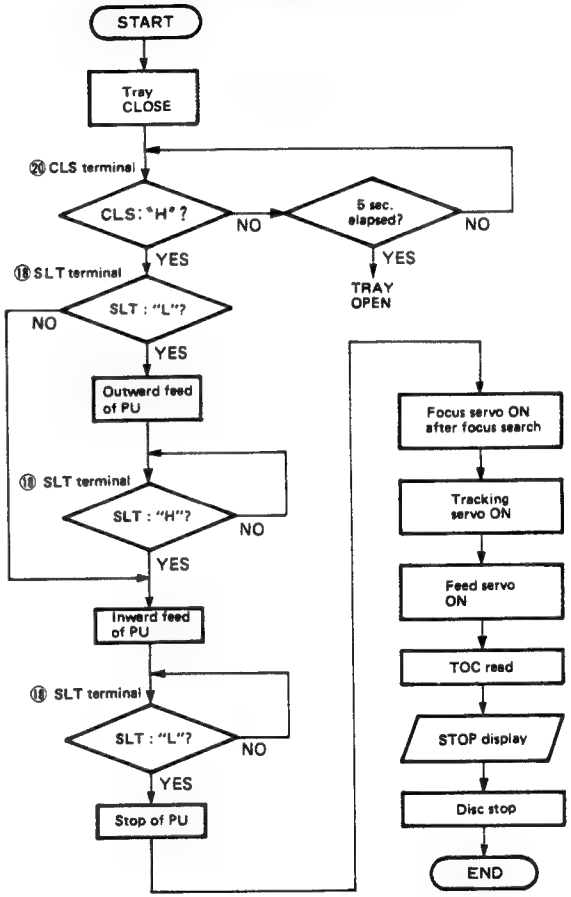

5. Microprocessor μPD75212ACW-052 (X32-137X-XX : IC16)

5-1. Terminal connection diagram

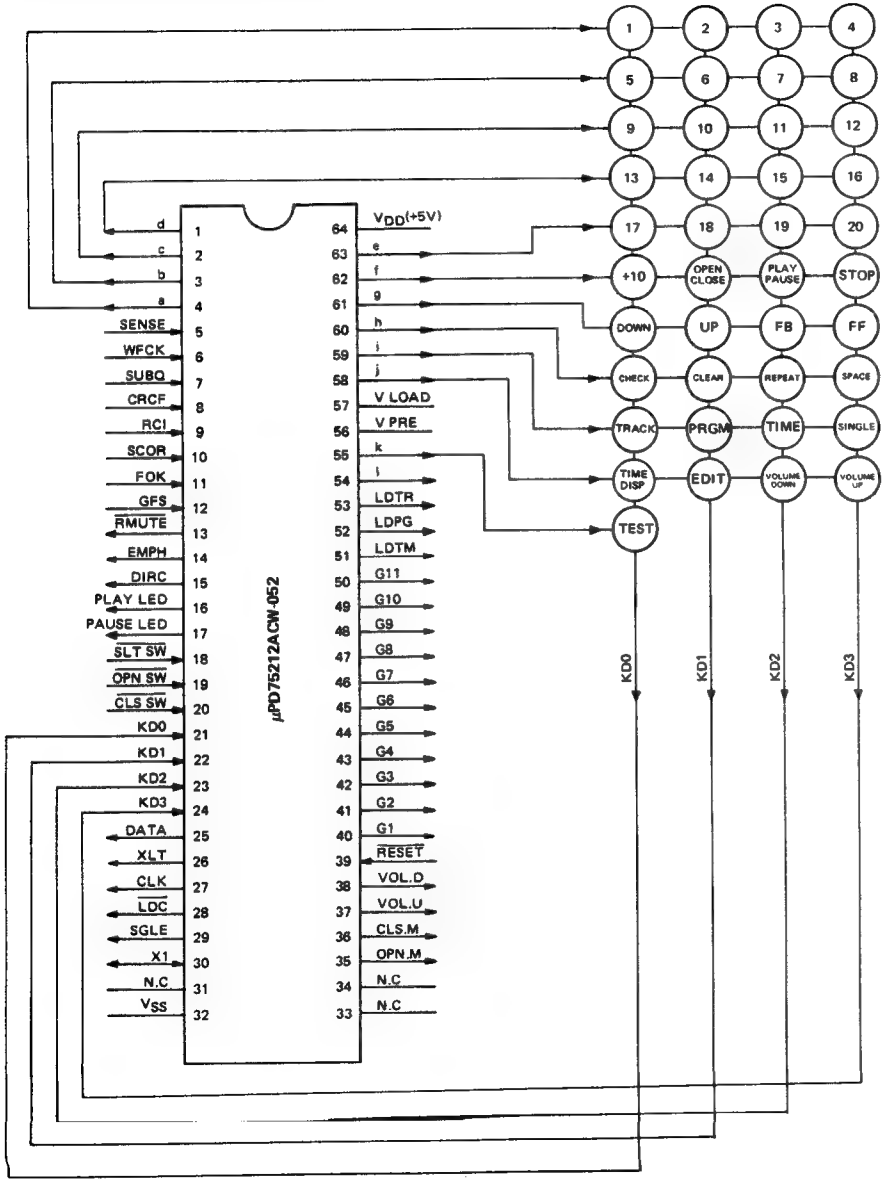

DP-7010

CIRCUIT DESCRIPTION

5-2. Explanation of terminals

Pin No.	Pin Name	I/O	Function
1~4	d~a	O	FL segment control pins (Also for key scan signal).
5	SENSE	I	Signal processing, detection pin of signal SENSE from servo IC (FZC, kick pulse, CLV).
6	WFCK	I	Q data read clock pulse input pin.
7	SUBQ	I	Q data input pin.
8	CRCF	I	Q data CRC check result input pin. Input from digital signal processing LSI ("H" : OK).
9	RCI	I	Remote control input pin.
10	SCOR	I	Sub-code frame sync detection signal input pin (In sync : "H").
11	FOK	I	RF amplifier FOK signal input pin.
12	GFS	I	Frame sync signal input pin (In frame sync : "H").
13	$\overline{\text{RMUTE}}$	O	Analog mute control pin (Active "L").
14	EMPH	O	De-emphasis control pin (Active "H").
15	DIRC	O	Servo IC DIRC pin. Direct control pin output (Normally : "H").
16	PLAY LED	O	Play LED drive port.
17	PAUSE LED	O	Pause LED drive port.
18	$\overline{\text{SLTSW}}$	I	Sled limit switch (Innermost : "L").
19	$\overline{\text{OPNSW}}$	I	Tray open switch (At open : "L").
20	$\overline{\text{CLSSW}}$	I	Tray close switch (At close : "L").
21~24	KD0~KD3	I	Key matrix key return input pins.
25	DATA	O	Signal processing, servo IC control output pin.
26	XLT	O	Signal processing, servo IC control output pin (latch).
27	CLK	O	Signal processing, servo IC control output pin (clock pulse).
28	$\overline{\text{LDC}}$	O	Laser ON/OFF signal output pin (Active "L").
29	SGLE	O	Signal mode lamp drive port.
30	X1	I/O	System clock pulse I/O pin.
31	–	–	Unused.
32	VSS	–	GND.
33,34	–	–	Unused.
35	OPNM	O	Tray motor OPEN output pin.
36	CLSM	O	Tray motor CLOSE output pin.
37	VOL. UP	O	Volume UP output pin (for motor VR).
38	VOL. DOWN	O	Volume DOWN output pin (for motor VR).
39	$\overline{\text{RESET}}$	I	Reset input pin.
40~50	G1~G11	O	FL digit control output pins.
51	LDTM	O	Time mode LED drive port.
52	LDPG	O	Program mode LED drive port.
53	LDTR	O	Track mode LED drive port.
54,55	l,k	O	FL segment control pins (also for key scan).
56	VPRE	–	FL predriver power supply.
57	VLOAD	–	FL driver negative power supply (–30V).
58~63	j~e	O	FL segment control output pins (also for key scan).
64	VDD	–	Power supply (+5V).

CIRCUIT DESCRIPTION

6. RF AMP. CXA1081M (X29-1890-05 : IC1)

General

The CXA1081M is an IC developed for use in Compact Disc players. It incorporates a 3-spot optical pickup RF output amplifier, a focusing error amplifier, a tracking error amplifier, and other signal processing circuitry, such as focus OK, mirror, defect, and EFM comparator circuits, as well as a laser diode APC (Automatic Power Control) circuit.

Features

- Operates on a signal + 5 V power supply, as well as on a ±5 V dual-voltage power supply
- Low power consumption (100 mW with ±5 V, 50 mW with + 5 V).
- An APC circuit which accepts either a P-sub or N-sub laser diode.
- A minimum of external parts required
- A disc defect detector circuit for improved playability

Structure

Bipolar silicon monolithic IC

Functions

- RF amplifier
- Focus OK detector circuit
- Mirror detector circuit
- Tracking error amplifier
- Defect detector circuit
- APC circuit
- EFM comparator
- Auto asymmetry control amplifier

6-1. Block diagram

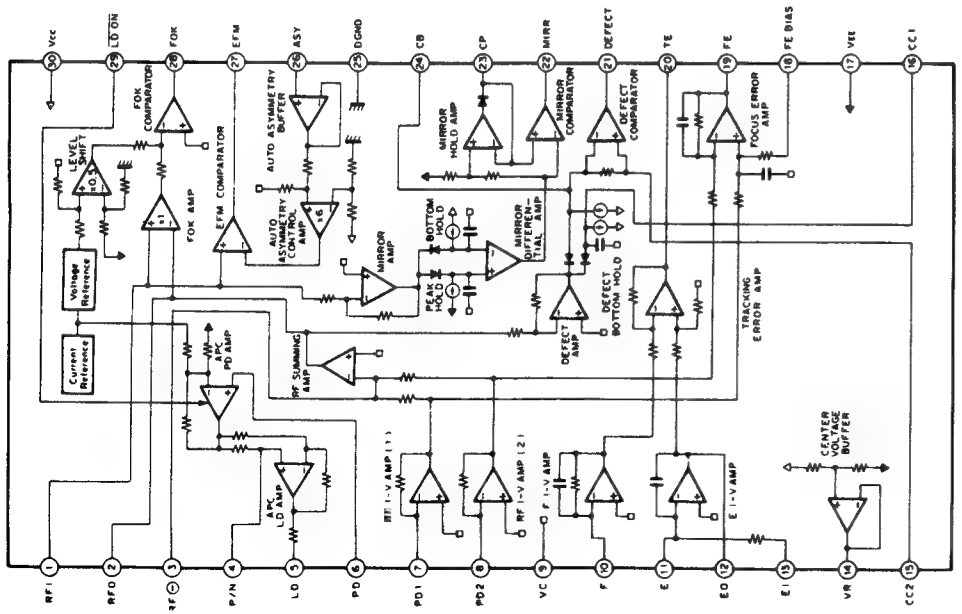

DP-7010

CIRCUIT DESCRIPTION

6-2. Explanation of terminals (V_{CC} = 2.5V, V_{EE} = D_{GND} = −2.5V, VC = GND)

Terminal No.	Terminal name	I/O	DC voltage (V)	Function
1	RFI	I	0	Input pin for the C-coupled signal output from the RF summing amplifier
2	RFO	O	V_{RFO}	RF summing amplifier output pin. Used as the check point for the eye pattern
3	RF⊖	I	0	RF summing amplifier feedback input pin
4	P/N	I	0 (VC)	P-sub/N-sub select pin for the LD (Laser Diode). (DC voltage: in N-sub mode)
5	LD	O	−1.8	*APC LD amplifier output pin. (DC voltage: PD open in N-sub mode)
6	PD	I	0	*APC LD amplifier input pin. (DC voltage: open)
7	PD1	I	0	RF I-V amplifier (1) inverted input pin Current input by connecting to the photodiode A + C terminal
8	PD2	I	0	RF I-V amplifier (2) inverted input pin Current input by connecting to the photodiode B + D terminal
9	VC	—	0	Connected to GND when using a positive (+)/negative (−) dual-voltage power supply Connected to VR (pin 14) when using a single-voltage power supply
10	F	I	0	F I-V amplifier inverted input pin Current input by connecting to the photodiode F terminal
11	E	I	0	E I-V amplifier inverted input pin Current input by connecting to the photodiode E terminal
12	EO	O	0	E I-V amplifier output pin
13	EI	I	0	E I-V amplifier feedback input pin. For E I-V amplifier gain adjustment
14	VR	O	V_{CVO}	DC voltage output pin of (V_{CC} + V_{EE})/2
15	CC2	I	1.0	Input pin for the C-coupled signal output from the defect bottom hold
16	CC1	O	1.2	Defect bottom hold output pin.
17	V_{EE}	—	−2.5	Connected to the negative power supply when using a positive (+)/negative (−) dual-voltage power supply. Connected to GND when using a single-voltage power supply
18	FE BIAS	I	0	Bias pin on the focus error amplifier non-inverted side For CMR adjustment of the focus error amplifier
19	FE	O	V_{FEO}	Focus error amplifier output pin
20	TE	O	V_{TEO}	Tracking error amplifier output pin
21	DEFECT	O	V_{DFCTL}	Defect comparator output pin. (DC voltage: connected to a 10 k-ohm load)
22	MIRR	O	V_{MIRL}	Mirror comparator output pin. (DC voltage: connected to a 10 k-ohm load)
23	CP	I	−1.3	Mirror hold capacitor output pin. Mirror comparator non-inverted input
24	CB	I	0	Defect bottom hold capacitor connect pin
25	DGND	—	−2.5	Connected to GND when using a positive (+)/negative (−) dual-voltage power supply Connected to GND (V_{EE}) when using a single-voltage power supply
26	ASY	I	—	Auto asymmetry control input pin
27	EFM	O	V_{EFMH}	EFM comparator output pin. (DC voltage: connected to a 10 k-ohm load)
28	FOK	O	V_{FOKL}	FOK comparator output pin. (DC voltage: connected to a 10 k-ohm load)
29	LD ON	I	−2.5 (DGND)	LD ON/OFF select pin. (DC voltage: when LD ON)
30	V_{CC}	—	2.5	Positive power supply

*APC: Automatic Power Control

CIRCUIT DESCRIPTION

7. Servo control CXA1244S (X32-137X-XX : IC10)

CXA1244S is a bipolar IC developed for servo of compact disc (CD) players, and it provides the following functions.

- ○ Focus control (search ON/OFF, gain control)
- ○ Tracking control (servo ON/OFF, single track jump, multiple track jump, gain control, phase compensation control, brake circuit)
- ○ Sled control (servo ON/OFF, fast forward, fast reverse)

Servo function of each of focus, tracking and sled as well as random access operation are realized through control by microcomputer. Furthermore, the serial data bus can be shared with CXD1125QZ.

7–1. Terminal connection diagram

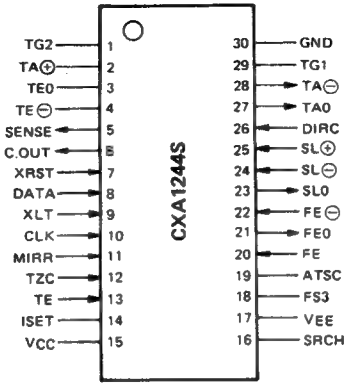

7–2. Block diagram

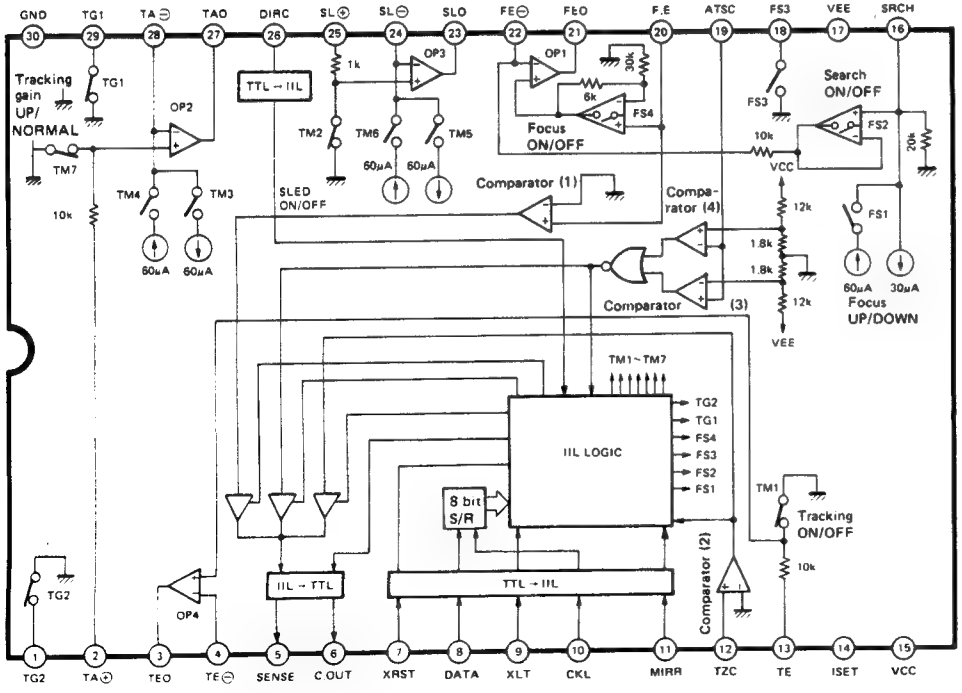

CIRCUIT DESCRIPTION

7–3. Explanation of terminals

Terminal No.	Terminal name	I/O	Functions
1	TG2		Tracking amplifier gain switching terminal. GND level.
2	TA ⊕		Non-inverted input of operational amplifier 2.
3	TE0		Output of operational amplifier 4.
4	TE ⊖	O	Inverted input of operational amplifier 4.
5	SENSE	O	Output of SSP internal status that corresponds to ADDRESS of CPU → SSP. (Changes in accordance with ADDRESS content of internal serial register.) See Note 1.
6	C. OUT	O	Signal output for counting number of tracks at the time of high speed access.
7	XRST	I	All internal registers are cleared when CPU → SSP "L". Connected with CPU RESET. See Note 2.
8	DATA	I	Serial data transmission of CPU → SSP. Input is made from LSB. D0~D7.
9	XLT	I	Latch of serial data of CPU → SSP. (The contents of internal serial register are transmitted to each address decoded latch.) Transmission at "L". Change to "H" occurs immediately after execution because no edge trigger is produced.
10	CLK	I	CPU → SSP serial data transmission clock. Data is read at falling. "H" level before and after transmission.
11	MIRR	I	Mirror signal input from RF amplifier.
12	TZC	I	Tracking error signal is input with C couple. The time constant is determined by one single track jump, but it is usually around 2kHz.
13	TE	I	Tracking error signal input.
14	ISET		Setting of current level for determining focus search voltage, tracking jump voltage and sled feed voltage.
15	Vcc		Power supply terminal. Normally −5V.
16	SRCH		The capacitor for determining the time constant of charge/duscharge waveform for focus search is connected.
17	VEE		Power supply terminal. Normally −5V.
18	FS3		Focus amplifier gain switching terminal. GND level.
19	ATSC		Such information that a mechanical shock was applied to the player is input. Simply, a trakcing error is input through B.P.F.
20	FE	I	Input of focus error signal.
21	FE0	O	Output of operational amplifier 1.
22	FE ⊖	I	Inverted input of operational amplifier 1.
23	SL0	O	Output of operational output 3.
24	SL ⊖	I	Inverted input of operational amplifier 3.
25	SL ⊕	I	Non-inverted input of operational amplifier 3.
26	DIRC	I	Used at the time of one track jump. Normally "H". The direction of the track jump pulse is reversed with "L". Setting is made in the normal tracking mode by changing to "H". "L" for a fixed length of time with detection of activation, deactivation of TZC.
27	TA0	O	Output of operational amplifier 2.
28	TA ⊖	O	Inverted input of operational amplifier 2.
29	TG1		Tracking amplifier gain switching terminal. GND level.
30	GND		GND terminal of IC.

Note 1 : SENSE terminal output

Serial data upper 4 bits	ADDRESS content	SENSE terminal output	Explanation
0 0 0 0	FOCUS CONTROL	FZC	"H" when focus zero cross. Focus erro voltage is 0V or higher. Used at the time of FOCUS PULL operation.
0 0 0 1	TRACKING CONTROL	AS	"H" when the ATSC input level exceeds the wind comparator level (VTH = ±Vcc × 13%). But this is not used in this equipment.
0 0 1 0	TRACKING MODE	TZC	Judgement output of positive or negative of tracking zero cross, tracking error. When used at the time of single track jump, DIRC is reduced to "L" on detection of TZC ↑ in FWD JUMP or on detection of TZC ↓ in REV JUMP

Note 2 : Digital unit timing chart

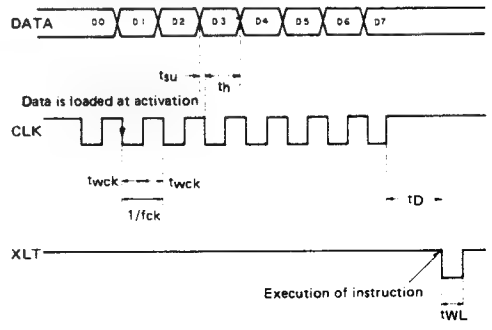

CIRCUIT DESCRIPTION

7-4. System control

COMMAND	ADDRESS				DATA				SENSE
	D7	D6	D5	D4	D3	D2	D1	D0	
FOCUS CONTROL	0	0	0	0	FS4 FOCUS ON	FS3 GAIN DOWN	FS2 SEARCH ON	FS1 SEARCH UP	FZC
TRACKING CONTROL	0	0	0	1	ANTI SHOCK	BREAK ON	TG2 GAIN	TG1* SET	AS
TRACKING MODE	0	0	1	0	TRACKING* MODE		SLED* MODE		TZC

GAIN SET* TG1, TG2 may be set independently.
In the case of ANTI SHOCK = 1 (00011XXX), both TG1, TG2 are inverted when ANTI SCHOCK = "H".

SLED MODE*

	D1	D0
OFF	0	0
SERVO ON	0	1
FWD MOVE	1	0
REV MOVE	1	1

TRACKING MODE*

	D3	D2
OFF	0	0
SERVO ON	0	1
FWD JUMP	1	0
REV JUMP	1	1

DP-7010

CIRCUIT DESCRIPTION

8. Digital signal processor CXD1125QZ (X32-137X-XX : IC20)

General

The CXD1125QZ is a digital processing LSI for ■ Compact Disc player, and has the following functions.

1. Bit clock reproduction by an EFM-PLL circuit
2. EFM data demodulation
3. Frame sync signal detection, protection and insertion
4. Powerful error detection and correction
5. Interpolation with an average value, or by holding the previous value
6. Demodulation of a sub code signal, error detection of a sub code Q
7. Spindle motor CLV servo
8. 8-bit tracking counter
9. CPU interface with a serial bus
10. Sub code Q register
11. Digital filter
12. Digital audio interface output

Features

- All digital signals used in playback can be processed using only a single chip.
- An aperture-correction digital filter is built in

Structure

CMOS IC

8-1. Block diagram

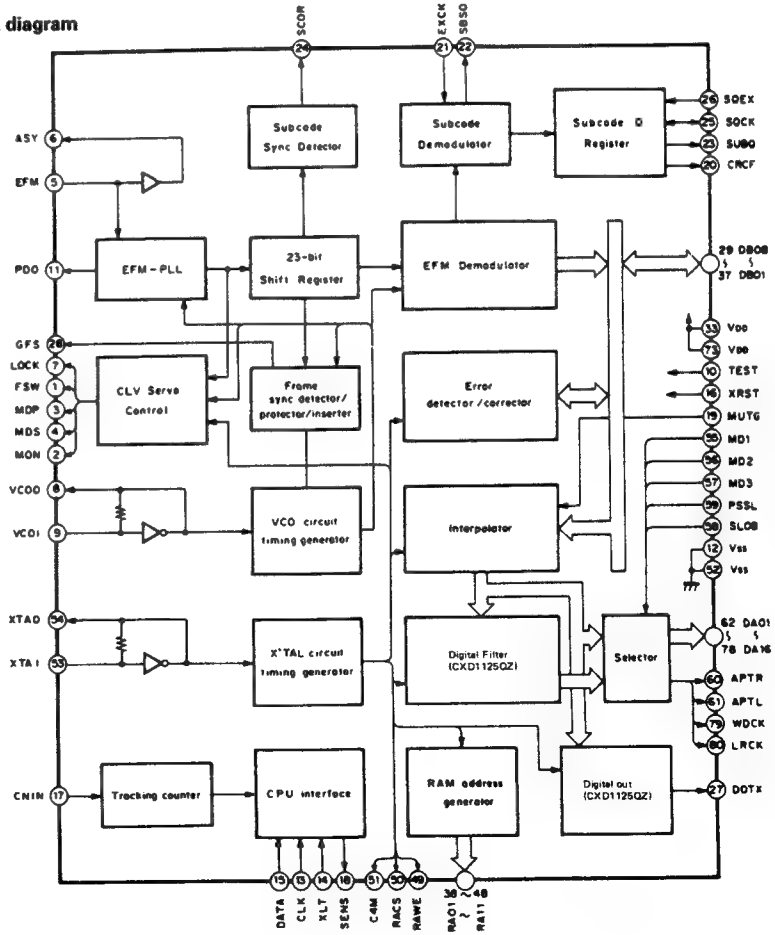

8-2. Explanation of terminals

Terminal No.	Terminal name	I/O	Function
1	FSW	O	Time constant switching output of output filter of spindle motor
2	MON	O	ON/OFF control output of spindle motor
3	MDP	O	Drive output of spindle motor. Rough speed control in CLV-S mode and phase control in CLV-P mode
4	MDS	O	Drive output of spindle motor. Speed control in CLV-P mode
5	EFM	I	EFM signal input from RF amplifier.
6	ASY	O	Output for controlling the slice level of EFM signal
7	LOCK	O	Samples the GFS signal with WFCK/16, and outputs "H" when the level is high When it is "L" for eight times, in arrow, outputs "L"
8	VCOO	O	VCO output. f = 8.6436 MHz when locked to EFM signal
9	VCOI	I	VCO input
10	TEST	I	(0 V)
11	PDO	O	Phase comparison output of EFM signal and VCO/2
12	Vss	–	GND (0 V)
13	CLK	I	Serial data transmission clock input from CPU. Data is latched at rising edge of a clock
14	XLT	I	Latch input from CPU. Data (serial data from CPU) from the 8 bit shift register is latched in each register
15	DATA	I	Serial data input from CPU.
16	XRST	I	System reset input. Reset at "L"
17	CNIN	I	Input of tracking pulse.
18	SENS	O	Output of internal status in correspondence to the address
19	MUTG	I	Muting input. In the case when ATTM of internal register A is "L" Normal status when MUTG is "L" or soundless state when it is "H"
20	CRCF	O	Output of result of CRC check of sub code Q.
21	EXCK	I	Clock input for sub code serial output.
22	SBSO	O	Sub code serial output.
23	SUBQ	O	Sub code Q output.
24	SCOR	O	Sub code sync S0 + S1 output.
25	SQCK	I/O	Sub code Q read-off clock
26	SQEX	I	SQCK select input.
27	DOTX	O	DIGITAL OUT output (Outputs the $\overline{WFCK}$ signal when CXD1130Q or D0 is off)
28	GFS	O	Display output of frame sync lock status.
29	DB08	I/O	Data pin of external RAM. DATA8 (MSB)
30	DB07	I/O	Data pin of external RAM. DATA7
31	DB06	I/O	Data pin of external RAM. DATA6
32	DB05	I/O	Data pin of external RAM. DATA5
33	Vdd	–	Power supply (+5 V)
34	DB04	I/O	Data pin of external RAM. DATA4
35	DB03	I/O	Data pin of external RAM. DATA3
36	DB02	I/O	Data pin of external RAM. DATA2
37	DB01	I/O	Data pin of external RAM. DATA1 (LSB)
38	RA01	O	Address output of external RAM. ADDR01 (LSB)
39	RA02	O	Address output of external RAM. ADDR02
40	RA03	O	Address output of external RAM. ADDR03
41	RA04	O	Address output of external RAM. ADDR04
42	RA05	O	Address output of external RAM. ADDR05
43	RA06	O	Address output of external RAM. ADDR06

DP-7010

CIRCUIT DESCRIPTION

Terminal No.	Terminal name	I/O	Function
44	RA07	O	Address output of external RAM. ADDR07
45	RA08	O	Address output of external RAM. ADDR08
46	RA09	O	Address output of external RAM. ADDR09
47	RA10	O	Address output of external RAM. ADDR10
48	RA11	O	Address output of external RAM. ADDR11 (MSB)
49	RAWE	O	Write Enable signal output to external RAM. (Active at "L")
50	RACS	O	Chip select signal output to external RAM. (Active at "L")
51	C4M	O	Crystal dividing output. f = 4.2336 MHz.
52	Vss	–	GND (0 V).
53	XTAI	I	Crystal oscillator input. f = 8.4672 MHz or 16.9344 MHz depending on the mode selected
54	XTAO	O	Crystal oscillator output. f = 8.4672 MHz or 16.9344 MHz depending on the mode selected
55	MD1	I	Mode select input 1.
56	MD2	I	Mode select input 2.
57	MD3	I	Mode select input 3.
58	SLOB	I	Audio data output code select input. 2's complement output when "L", offset binary output when "H"
59	PSSL	I	Audio data output mode select input. Serial output when "L", parallel output when "H"
60	APTR	O	Aperture compensation control output. "H" when R-ch.
61	APTL	O	Aperture compensation control output. "H" when L-ch.
62	DA01	O	DA01 (parallel audio data LSB) output when PSSL = "H", C1F1 output when PSSL = "L"
63	DA02	O	DA02 output when PSSL = "H", C1F2 output when PSSL = "L"
64	DA03	O	DA03 output when PSSL = "H", C2F1 output when PSSL = "L"
65	DA04	O	DA04 output when PSSL = "H", C2F2 output when PSSL = "L"
66	DA05	O	DA05 output when PSSL = "H", C2FL output when PSSL = "L".
67	DA06	O	DA06 output when PSSL = "H", C2PO output when PSSL = "L"
68	DA07	O	DA07 output when PSSL = "H", RFCK output when PSSL = "L"
69	DA08	O	DA08 output when PSSL = "H", WFCK output when PSSL = "L".
70	DA09	O	DA09 output when PSSL = "H", $\overline{PLCK}$ output when PSSL = "L"
71	DA10	O	DA10 output when PSSL = "H", UGFS output when PSSL = "L"
72	DA11	O	DA11 output when PSSL = "H", GTOP output when PSSL = "L"
73	Vdd	–	Power supply (+5 V).
74	DA12	O	DA12 output when PSSL = "H", RAOV output when PSSL = "L".
75	DA13	O	DA13 output when PSSL = "H", C4LR output when PSSL = "L".
76	DA14	O	DA14 output when PSSL = "H", $\overline{C21O}$ output when PSSL = "L".
77	DA15	O	DA15 output when PSSL = "H", C21O output when PSSL = "L".
78	DA16	O	DA16 (parallel audio data MSB) output when PSSL = "H", DATA output when PSSL = "L"
79	WDCK	O	Strobe signal output. 176.4 kHz when DF is ON, 88.2 kHz with CXD1125Q or when DF is OFF
80	LRCK	O	Strobe signal output. 88.2 kHz when DF is ON, 44.1 kHz with CXD1125Q or when DF is OFF.

Notes:

C1F1 :
C1F2 :] Error correction status monitor output for C1 decode.

C2F1 :
C2F2 :] Error correction status monitor output for C2 decode.

C2FL : Correction status output. Goes "H" when the currently corrected C2 series data cannot be corrected.

C2PO : C2 pointer signal. Synchronized to the audio data output.

RFCK : Read frame clock output. 7.35 MHz when locked to the crystal line.

WFCK : Write frame clock output. 7.35 MHz when locked to the crystal line.

$\overline{PLCK}$: VCO/2 output. f = 4.3218 MHz when locked to the EFM signal.

UGFS : Non-protected frame sync pattern output.

GTOP : Frame sync protect status display output.

RAOV : ±4 frame jitter absorption RAM overflow and underflow display output.

C4LR : Strobe signal. 352.8 kHz when DF is ON, 176.4 kHz with CXD1125Q or when DF is OFF.

$\overline{C21O}$: C21O invert output.

C21O : Bit clock output. 4.2336 MHz when DF is ON, 2.1168 MHz with CXD1125Q or when DF is OFF.

DATA : Audio signal serial data output.

CIRCUIT DESCRIPTION

9. 18-bit serial input D/A converter PCM58P (X32-137X-XX : IC7, 8)

9–1. Terminal connection diagram

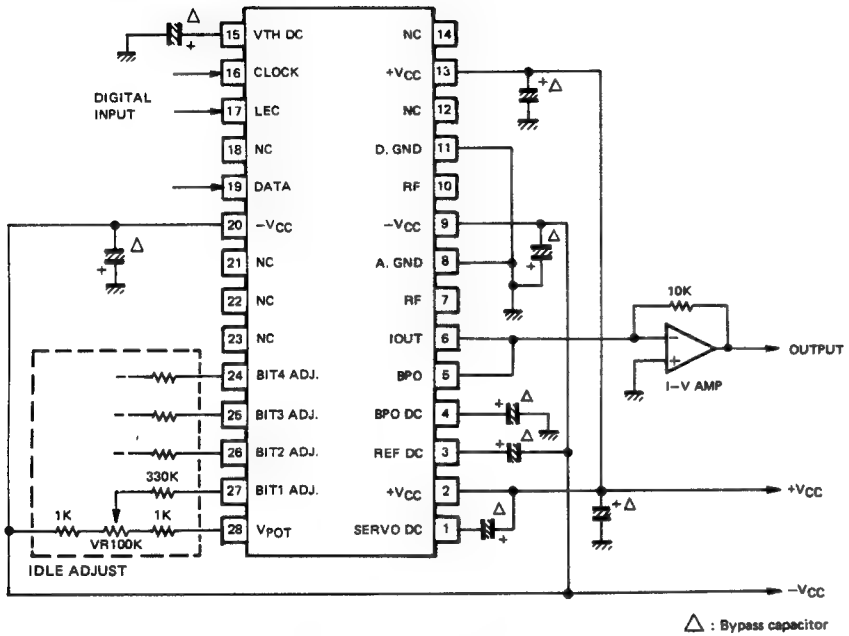

9–2. Terminal connections

Pin No.	Pin Name	Pin No.	Pin Name
1	Servo filter	15	VTH filter
2	+Vcc	16	Clock pulse input
3	Reference filter	17	LEC input
4	BPO filter	18	NC
5	Bipolar offset	19	Data input
6	Current output	20	–Vcc
7	RF	21	NC
8	Analog COM	22	NC
9	–Vcc	23	NC
10	RF	24	BIT4 ADJ
11	Digital COM	25	BIT3 ADJ
12	NC	26	BIT2 ADJ
13	+Vcc	27	BIT1 ADJ
14	NC	28	VPOT

DP-7010

CIRCUIT DESCRIPTION

9–3. Block diagram

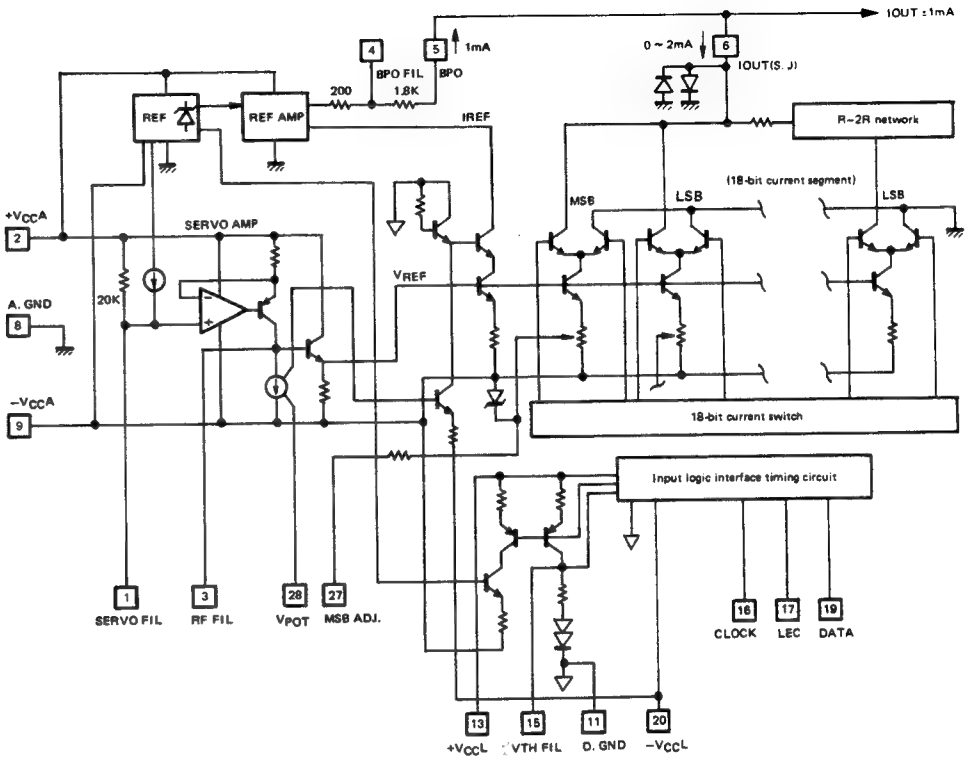

9–4. Timing chart

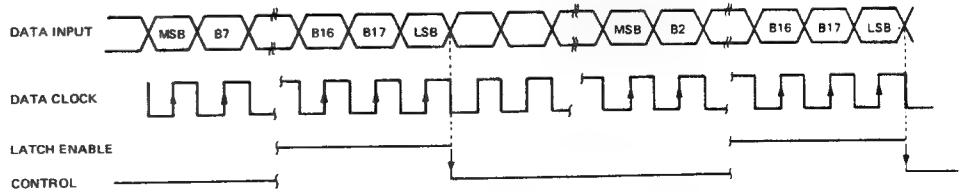

- The data format is of 2's complement, right-justified or continuous data of MSB first.
- Data is taken in to the shift register at the rise of the data clock pulse.

10. 8x over-sampling digital filter SM5813AP (X32-137X-XX : IC14)

10–1. Function

- 2-channel processing
- 8x over-sampling (interpolation) filter
  (hereinafter referred to as 8fs for short)
- Serial input data
  2's complement, MSB first
  16-bit
- Serial output data
  MSB first
  2's complement/COB selectable
  Selectable between 16-, 18- and 20-bit
- Jitter-free
  Prevents any faulty operation due to the jitter of the input clock signal, thus eliminating the jitter transmission over to the output.
- System clock pulse
  Selectable from 192fs, 256fs, 384fs and 512fs
- Crystal oscillation circuit incorporated
- I/O TTL compatible
- 5 V single power supply
- 28-pin plastic DIP

10–2. Filter configuration

- Interpolation filter
  Linear phase FIR filter 3-stage configuration
  First stage (fs — 2fs), 153rd
  Second stage (2fs — 4fs), 29th
  Third stage (4fs — 8fs), 17th
- 22-bit filter coefficient, 20x22 bit parallel multiplier/25-bit accumulator high-accuracy operation
- Overflow limiter incorporated

10–3. Applications

- CD playback
- DAT playback
- PCM playback

10–4. Filter characteristics

Characteristic item	Performance
Pass band	0 ~ 0.4535fs
Reject band	0.5465fs ~ 7.4535fs
Pass band ripple	Within ±0.00005dB
Reject band attenuation	More than 110dB
Group delay time	Fixed

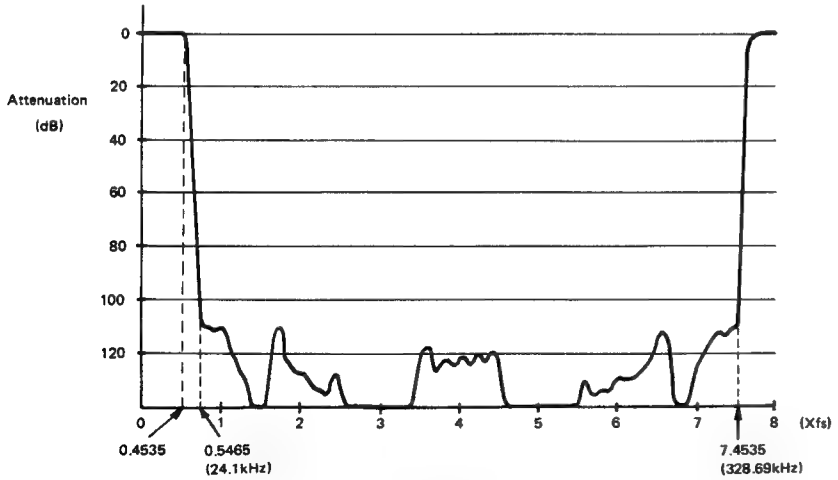

Fig. 10–1 Frequency response

10–5. Terminal connection diagram

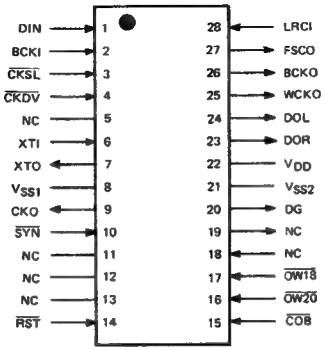

10–6. Block diagram

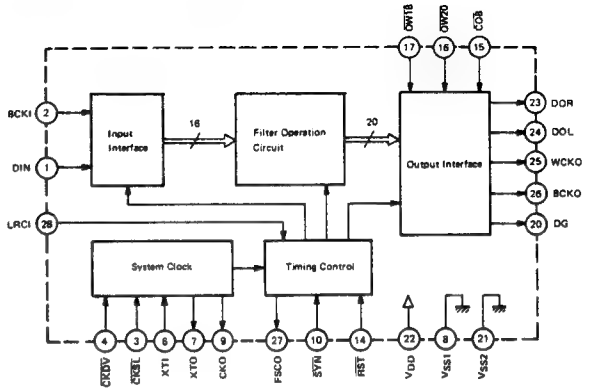

10–7. Explanation of terminls

"fs" occurring in the description means the sampling frequency of the input data.

Pin No.	Pin Name	I/O	Function
1	DIN	I	Input data.
2	BCKI	I	Input data beat clock pulse.
3,4	$\overline{CKSL}$, $\overline{CKDV}$	I	XTI pin input frequency selection. (For details, refer to the description of XTI pin.)
5	NC	–	Unused.
6	XTI	I	Oscillator section input pin. 192 fs : CKSL = "H", CKDV = "H" 256 fs : CKSL = "H", CKDV = "L" 384 fs : CKSL = "L", CKDV = "H" 512 fs : CKSL = "L", CKDV = "L"
7	XTO	O	Oscillator section output pin.
8	V_{SS1}	–	GND1.
9	CKO	O	Oscillator section output clock pulse. (Frequency is the same as in XTI pin.)
10	$\overline{SYN}$	I	Jitter-free mode/compulsory sync mode selection. ("H : Jitter-free mode, "L" : Compulsory sync mode)
11~13	NC	–	Unused.
14	$\overline{RST}$	I	System reset. ("H" : normal operation, "L" : system reset)
15	$\overline{COB}$	I	2's complement/COB selection. ("H" : 2's complement, "L" : $\overline{COB}$)
16,17	$\overline{OW20}$, $\overline{OW18}$	I	Number-of-output-bits selection. No. of output bits: 16 / 18 / 20 $\overline{OW18}$: H / L / H $\overline{OW20}$: H / H / L
18,19	NC	–	Unused.
20	DG	O	Deglitch control clock pulse.
21	V_{SS2}	–	GND2.
22	V_{DD}	–	Power supply (+5V).
23	DOR	O	Rch 8x over-sampling output data.
24	DOL	O	Lch 8x over-sampling output data.
25	WCKO	O	Output data word clock pulse.
26	BCKO	O	Output data bit clock pulse.
27	FSCO	O	fs-period internal operation timing clock pulse.
28	LRCI	I	Input data sampling rate (fs) clock pulse. ("H" : Lch, "L" : Rch)

CIRCUIT DESCRIPTION

10–8. Function

• 8x over-sampling (interpolation) filter function

This function works to output the over-sampling data of sampling rate 8fs. In this case, sampling noises between 0.5465fs (24.1kHz) and 7.4535fs (328.69kHz) are removed.

The interpolation operation block configuration of this LSI is of a cascade connection of three 2x interpolation filters (FIR).

• System clock (XTI, XTO, CKO, $\overline{CKSL}$, $\overline{CKDV}$)

The system clock pulse can be selected from 192fs, 256fs, 384fs and 512fs. More, operation is feasible even by an external clock (input to pin XTI) or a crystal oscillator (inserted between pins XTI and XTO). In this unit, a clock pulse of 8.4672 MHz is input to pin XTI.

From pin CKO, the system clock pulse is output. (See Figure 10-3.)

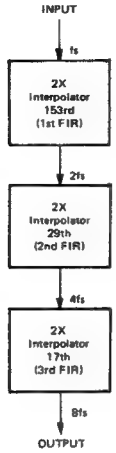

Fig. 10–2 Configuration of basic operation section

$\overline{CKDV}$		H		L	
$\overline{CKSL}$		H	L	H	L
XTI input clock frequency (Fxi)	Fxi = 1/tXI	192fs	256fs	384fs	512fs
Clock pulse input method		External clock (input to pin XTI) or internal clock (a crystal oscillator inserted between pin XTI and XTO).			
Internal system clock pulse period	Tsys	tXI		2*tXI	

tXI stands for the XTI input clock pulse period.

Table 10–1 System clock frequency selection and internal system clock

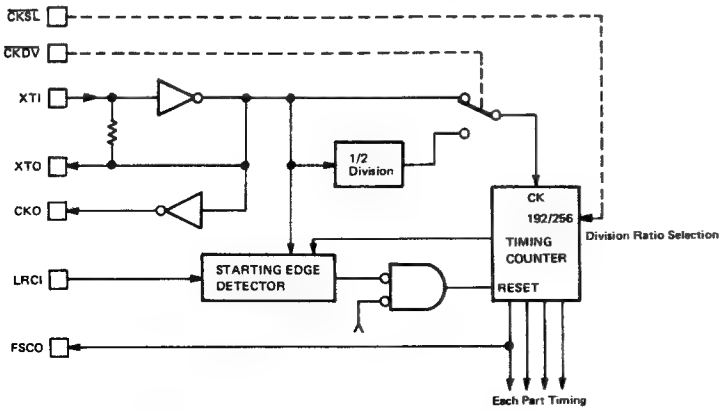

Fig. 10–3 Clock generation circuit

CIRCUIT DESCRIPTION

• Audio data input (DIN, BCKI, LRCI)

The input data is handled as being of 2's complement, MSB first. Each bit of the serial data input to pin DIN is read in to register SIPO (serial/parallel conversion register) a the leading edge of bit clock pulse BCKI, in which it is in turn converted into a parallel data. The output of SIPO is transferred to each of the Lch and Rch input registers at the trailing/leading edge of clock pulse LRCI.

In addition, the operation section and the output section are independent in signal timing from the input section and are therefore unsusceptible to the jitter of the input section. (Jitter-free mote: For details, refer to the description occurring later.)

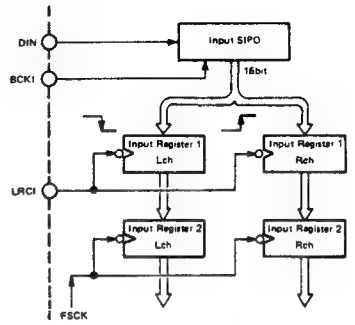

Fig. 10–4 Configuration of audio data input section

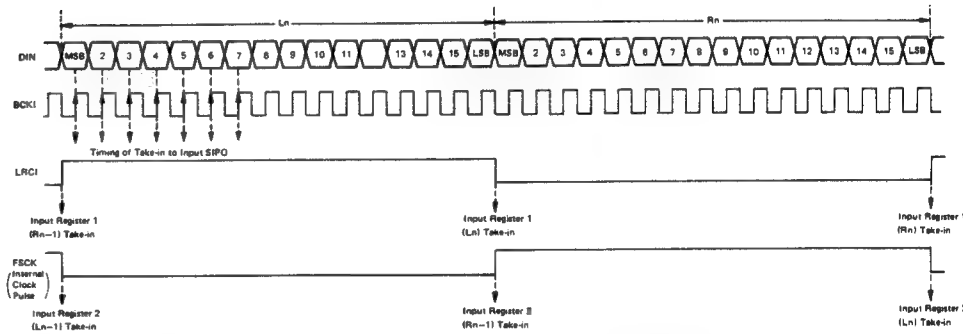

16bits right before LRCI edge is taken in as data.

Fig. 10–5 Audio data input timing example

• Selection between jitter-free mode and compulsory sync mode ($\overline{SYN}$, FSCO)

The signal timing (internal timing) applied to internal operation or output, that is produced from the system clock pulse (input to pin XTI), is independent from that of the data input section (BCKI, LRCI).

For this internal timing, the method of countering the jitter of clock pulse input LRCI is available in two types, "jitter-free mode" and "compulsory sync mode". Selection between these both is feasible by setting $\overline{SYN}$.

1) Jitter-free mode ($\overline{SYN}$="H")

As long as the phase difference between clock pulse LRCI and the internal timing is within +3/8 to –3/8 of the input sampling period (1/fs), the internal timing is not adjusted. Accordingly, even with a jitter component in clock pulse LRCI, the internal timing is not affected so that it is free from faulty operation or jitter transmission to output.

When the phase difference is without the above range, the internal timing is put in phase synchronously with the start side of clock pulse LRCI. More, this treatment is also performed when the reset input is given.

2) Compulsory sync mode ($\overline{SYN}$="L")

When this mode is engaged, the internal timing is always reset at a pulse edge of the start side of input LRCI. In this case, when a pulse period shorter than the specified system clock pulse period exists due to the jitter of input LRCI, a faulty operation may result.

Conversely, when a pulse period longer exists, the operation is properly made but no equal output timing is obtained.

3) Clock pulse FSCO (output)

This is a clock pulse with a period of fs obtained from the dividing process of clock pulse XTI.

• Data and DAC control signal output (DOL, DOR, BCKO, WCKO, DG, $\overline{COB}$, $\overline{OW18}$,$\overline{OW20}$)

1) Output data format

1) MSB first
2) 2's complement/COB (Complemented Offset Binary) selection ($\overline{COB}$)
   2's complement format ($\overline{COB}$="H")
   COB format ($\overline{COB}$="L")

2) Output data number-of-bits selection ($\overline{OW18}$, $\overline{OW20}$)

As to the number of bits for the output data, any of 16, 18 and 20-bit can be selected.
16-bit output ($\overline{OW18}$="H", $\overline{OW20}$="H")
18-bit output ($\overline{OW18}$="L", $\overline{OW20}$="H")
20-bit output ($\overline{OW18}$="H", $\overline{OW20}$="L")
However, this unit is set at the 18-bit output mode.

3) Output timing

The output timing of the audio output section is determined according to each internal system clock pulse frequency.

Item	Symbol in diagram	$\overline{CKSL}$	
		H	L
Internal system clock pulse frequency		192fs	256fs
Bit clock pulse period	Tb	Tsys	Tsys
Data word length	Tw	24*Tsys	32*Tsys

Tsys : internal clock pulse period (Refer to Table*10-1.)
Tb, Tw : serial output timing (Refer to Figure 10-6.)

Table 10–2 Output timing

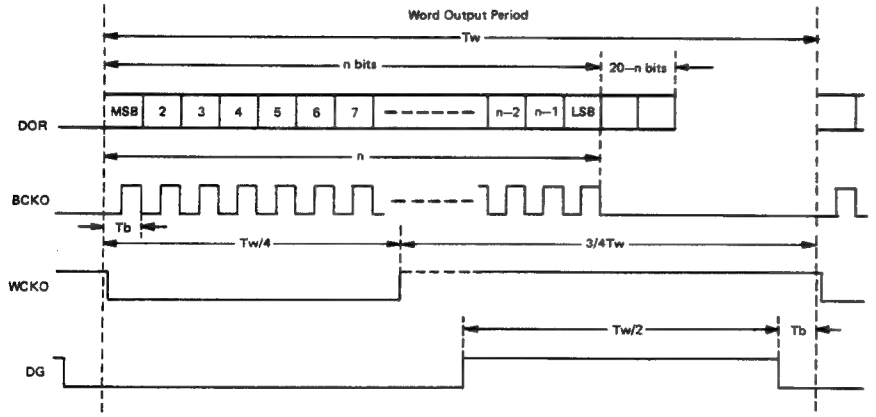

Note : n means the number of output word bits.

Fig. 10–6 Output timing

• System reset ($\overline{RST}$)

When the reset input is made in the jitter-free mode, the internal operation timing is reset in synchronization with the leading edge of input LRCI. Making use of this, the output timing in the jitter-free mode can be aligned with input LRCI.

In the compulsory sync mode, no system reset is needed. Even in the jitter-free mode, the output timing does not need to be aligned with input LRCI and no system reset is necessary.

For system reset at power ON, externally connect a capacity of around 100pF to pin $\overline{RST}$. (Figure 10-7)

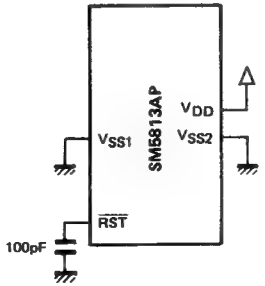

Fig. 10–7 Circuit example of system reset at power ON

DP-7010

CIRCUIT DESCRIPTION

10–9. Timing chart

• Serial input timing (DIN, BCKI, LRCI)

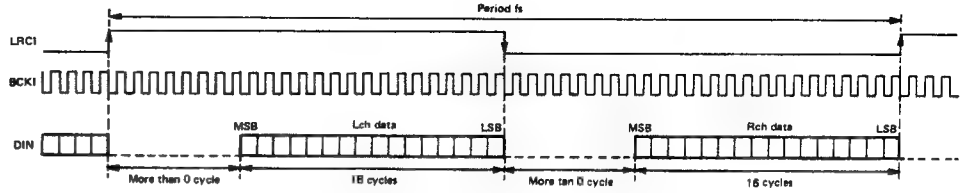

Note : BCKI should have 18 cycles or more for one word.

Fig. 10–8 Serial input timing

• Serial output timing (DOL, DOR, BCKO, WCKO, DG)

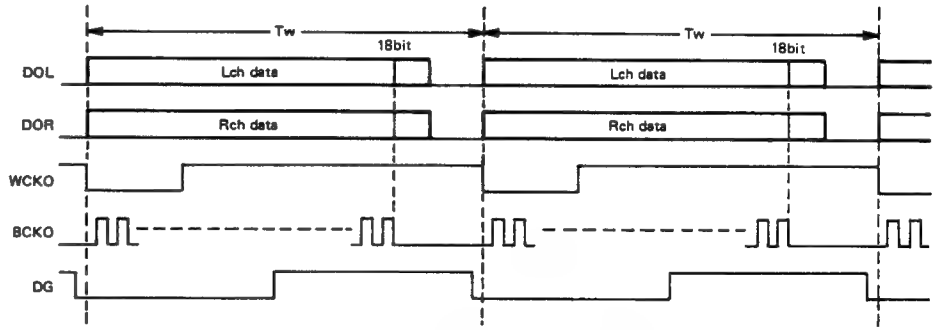

Fig. 10–9 Serial output timing

CIRCUIT DESCRIPTION

11. D.P.A.C IC TC17G008AF-8060 (X32-137X-XX : IC19)

11-1. Terminal connection diagram

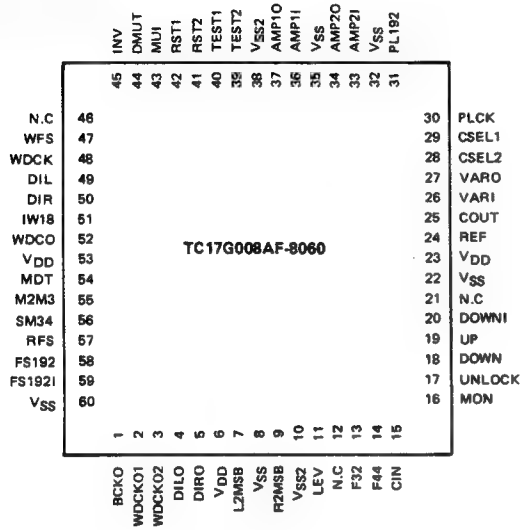

11-2. Block diagram

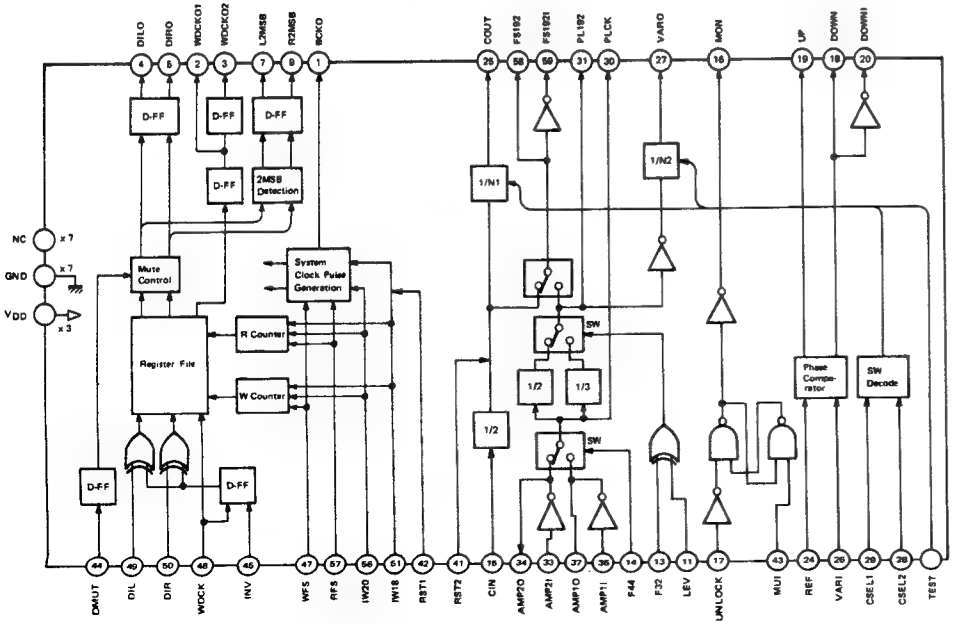

CIRCUIT DESCRIPTION

11-3. Explanation of terminals

Pin No.	Pin Name	I/O	Function
1	BCKO	O	Bit clock pulse
2	WDCKO1	O	Output word clock pulse. Synchronous with the rise of data.
3	WDCKO2	O	Output word clock pulse. Delayed half clock pulse width from the rise of data.
4	DILO	O	Lch output data.
5	DIRO	O	Rch output data.
6	VDD	I	Power supply (+5V).
7	L2MSB	O	Lch 2MSB level output.
8	VSS	–	GND.
9	R2MSB	O	Rch 2MSB level output.
10	VSS2	–	GND.
11	LEV	I	VCXO clock pulse division selection.
12	NC	–	Unused.
13	F32	I	FS32 flag.
14	F44	I	FS44 flag.
15	CIN	I	384FS clock pulse.
16	MON	O	Monitoring to see which of unlock and lock modes is engaged.
17	UNLOCK	I	
18	DOWN	O	Phase comparator down output.
19	UP	O	Phase comparator up output.
20	DOWNI	O	Inversion output of DOWN.
21	NC	–	Unused.
22	VSS	–	GND.
23	VDD	I	Power supply (+5V).
24	REF	I	Phase comparator R input.
25	COUT	O	Clock pulse obtained from 1/N1 division of 384FS clock pulse.
26	VARI	I	Phase comparator V input.
27	VARO	O	Clock pulse obtained from 1/N2 division of VCXO.
28	CSEL2	I	Division setting.
29	CSEL1	I	
30	PLCK	O	Check to see whether VCXO is 18MHz or 16MHz.
31	PL192	O	FS192 monitor.
32	VSS	–	GND.
33	AMP2I	I	VCO (16MHz) clock pulse amplifier.
34	AMP2O	O	VCO (16MHz) clock pulse amplifier.
35	VSS	–	GND.
36	AMP1I	I	VCO (18MHz) clock pulse amplifier.
37	AMP1O	O	VCO (18MHz) clock pulse amplifier.
38	VSS2	–	GND.
39	TEST2	I	Test pin, fixed to 0V.
40	TEST1	I	Test pin, fixed to 0V.
41	RST2	I	PLL system reset input pin (Reset at "L").
42	RST1	I	TBC system reset input pin (Reset at "L").

CSEL1	CSEL2	N1	N2	Application
0	0	1	1	–
1	0	8	96	BS
0	1	192	192	AMP
1	1	256	256	AMP

Pin No.	Pin Name	I/O	Function
43	MUI	I	PLL system mute input pin.
44	DMUT	I	TBC system mute input pin (Mute at "H").
45	INV	I	Input data inversion (both Lch and Rch) (Inversion at "H").
46	NC	–	Unused.
47	WFS	I	Write clock pulse synchronous with input data.
48	WDCK	I	Input word clock pulse.
49	DIL	I	Lch input data.
50	DIR	I	Rch input data.
51	IW18	I	Data bit length selection (16-bit/18-bit = "L"/"H").
52	WDCO	O	Digital filter MEN signal.
53	VDD	I	Power supply (+5V).
54	MDT	O	Digital filter MDT signal.
55	M2M3	O	Digital filter A1/A2 input signal.
56	SM34	I	Digital filter selection.
57	RFS	I	Read clock pulse synchronous with output data.
58	FS192	O	FS192 clock pulse.
59	FS192I	O	FS192 clock pulse inversion.
60	VSS	–	GND.

11–4. Functions

• TBC function

The write data clock pulse (WFS) and the read data clock pulse (RFS) are independent in operation from each other. Thus, the jitter margin ranges ±1 clock pulse widths.

For 2MSB detection, the level (2's complement) of the 2MLSB detection value at playback is output for both Lch and Rch.

Figure 11-1 shows the I/O waveforms in use of each digital filter.

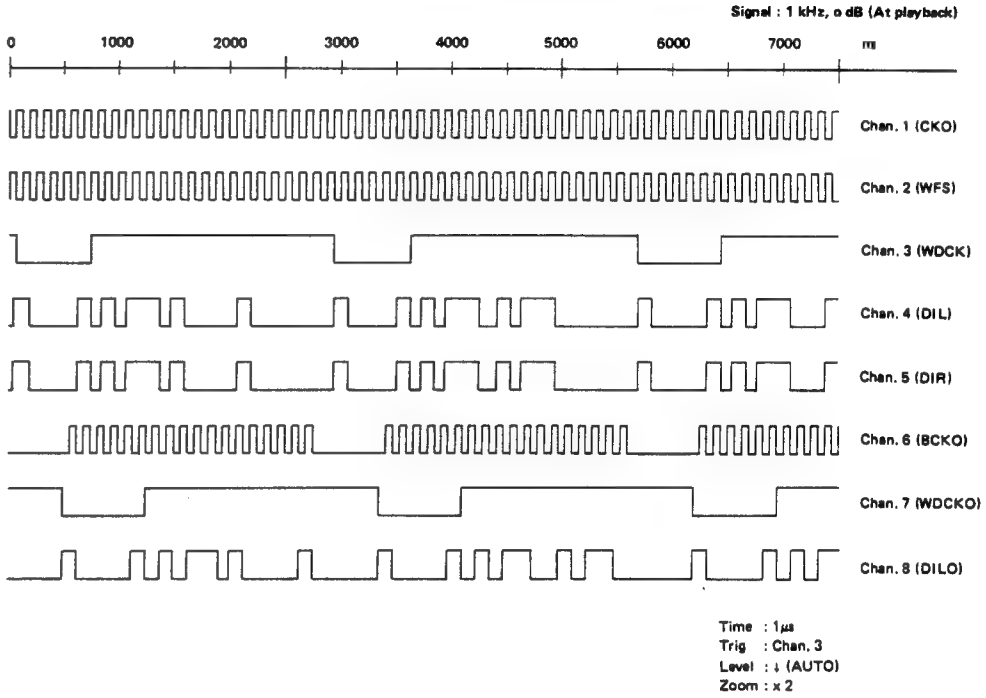

Fig. 11–1 D.P.A.C timing chart

• PLL function

Since the phase comparator is of a well-known system, its description is not made here.

For the counter setting of the divider, the type of the input clock pulse, LPF and VCXO circuit configuration, etc., refer to "11-2 Block diagram" and "11-3 Pin functions".

• Digital filter mode setting

Only two modes are available, 16-bit and 18-bit modes. This unit is set at the 18-bit mode.

The mode change is performed at the time of muting. The status right before the cancel of muting is held.

MECHANISM OPERATION DESCRIPTION

Mechanism operation description

Fig. 1 shows the relationship of mechanisms in the STOP mode. The OPEN/CLOSE operation of the mechanism and the UP/DOWN operation of the pickup chassis when loading the disc are description below.

Note 1 : The black arrow (OPEN) and the white arrow (CLOSE) in the operation description have the following meanings :

Black arrow (OPEN) : Tray opening direction (Tray OPEN)

White arrow (CLOSE) : Tray closing direction (Tray CLOSE)

Note 2 : Figures in the bracket ( ) in the operation description or accompanied with the part name in the diagram show the reference numbers in the Exploded View.

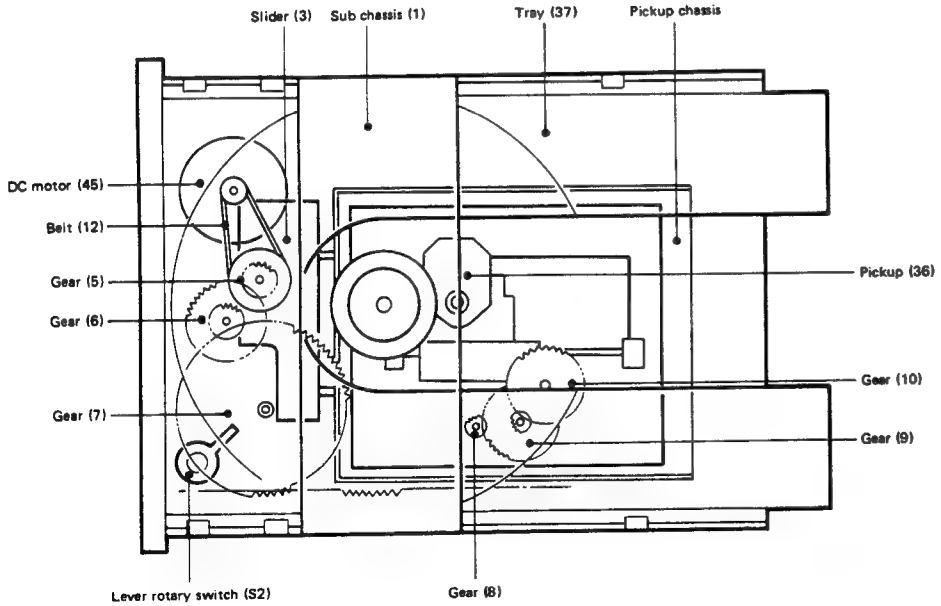

Fig. 1 Tray closed status

DP-7010

MECHANISM OPERATION DESCRIPTION

1. Tray OPEN/CLOSE operation

By the rotation of the motor (❶), the gear (❷) is rotated and the tray starts OPEN/CLOSE (❸) operation. The OPEN/CLOSE operation stops when the protrusion of the gear comes in contact with the detection switch (❹).

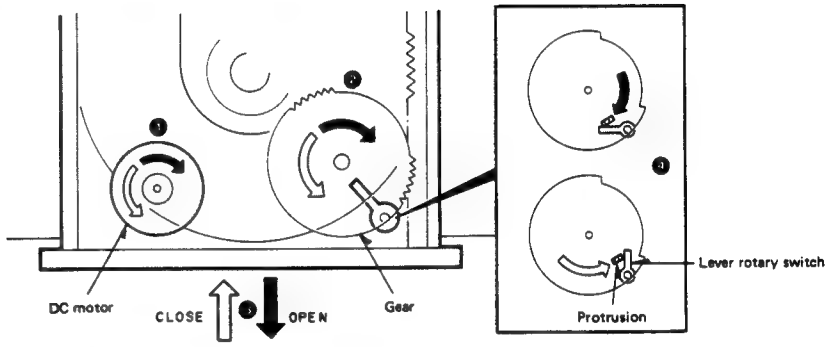

Fig. 2 Tray OPEN/CLOSE operation

2. Pickup chassis UP/DOWN movement

Accompanied with the OPEN/CLOSE operation, the lever is shifted (❷) by the rotation of the gear (❶). Along with the grooves in the lever, the pickup chassis moves up and down (❸).

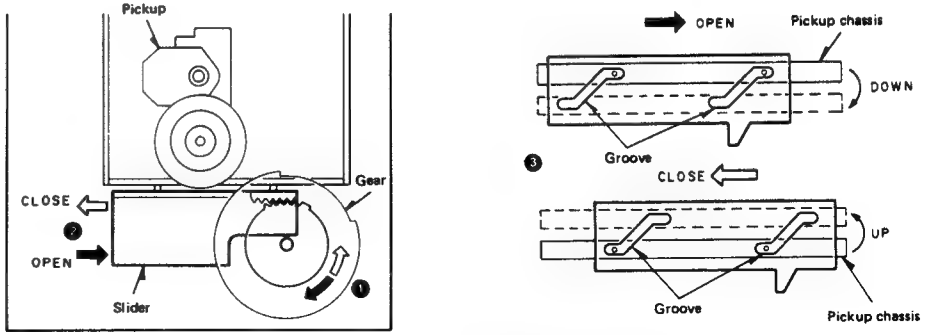

Fig. 3 Pickup chassis UP/DOWN movement

MECHANISM OPERATION DESCRIPTION

3. Gear installing position

When re-installing the gear after removing it, attach the gear at the position (Ⓐ) shown in the condition when the pickup chassis has been lowered.

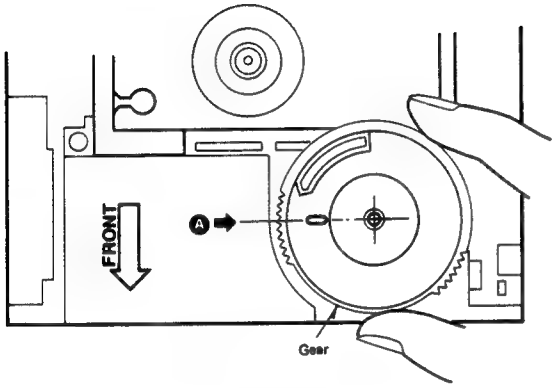

Fig. 4 Gear installing position

ADJUSTMENT

No.	ITEM	INPUT SETTING	OUTPUT SETTING	PLAYER SETTING	ALIGNMENT POINT	ALIGN FOR	FIG
1	LASER POWER	–	Apply the sensor section of the optical power meter on the pickup lens.	Short-circuit pins TEST and turn the power on to enter the test mode. Press the MANUAL S. key(⏭)to move the pickup outwards. Press the CHECK key to check that the LD emits light. Then, confirm that the display is" 00 ".	–	On the power from 0.1 to 0.3mW, when the diffraction grating is correctly aligned with the RF level of 1.5Vp-p or more and the TE (servo open) level of 1.5Vp-p or more, the pickup is acceptable.	(a)
2	VCO	–	Connect a frequency counter to PLCK (TP7). (X32-1370)	Press the STOP key, and confirm that the display is "01".	L14 (X32-1370)	4.32MHz	(b)
3	TRACKING ERROR BALANCE	Test disc Type 4	Connect an oscilloscope as follows. CH1: RF (X29-1890 TP1) CH2: TE (X32-1370 CN6 pin 1)	Press the REPEAT key to open the tray. Load a disc and close the tray by pushing it by hand. Then,press the CHECK key. Confirm that the display is"03".	TE BALANCE VR2 (X29-1890)	Symmetry between upper and lower patterns, or DC=0±0.05V	(c)
4	FOCUS ERROR BALANCE	Test disc Type 4	Connect an oscilloscope as follows. CH1: RF (X29-1890 TP1) CH2: TE (X32-1370 CN6 pin 1)	Press the PLAY key. Confirm that the display is" 05 ".	FE BALANCE VR1 (X29-1890)	Optimum eyepattern	(d)
5	FOCUS GAIN	Test disc Type 4 Apply signal of 1kHz, 0.5Vrms to CN5 pin 2. (X32-1370)	Connect an LPF to CN5 pin 1, to which connect an oscilloscope or an AC voltmeter. (X32-1370)	Press the PLAY key. Confirm that the display is" 05 ".	FOCUS GAIN VR6 (X32-1370)	50mVrms	(e)
6	TRACKING GAIN	Test disc Type 4 Apply signal of 2kHz, 0.5Vrms to CN5 pin 4. (X32-1370)	Connect an LPF to CN5 pin 5, to which connect an oscilloscope or an AC voltmeter. (X32-1370)	Press the PLAY key. Confirm that the display is" 05 " .	TRACKING GAIN VR7 (X32-1370)	50mVrms	(e)
7	DAC DISTORTION (MSB)	Test disc Type 4	Connect an distortion meter to the output terminal(FIXED).	Play the 1kHz, -20dB signal in track No.15	VR1:L VR2:R (X32-1370)	Minimum distortion	(f)
8	DAC DISTORTION (2SB)	Test disc Type 4	Connect an distortion meter to the output terminal(FIXED).	Play the 100Hz, 0dB signal in track No.4.	VR3:L VR4:R (X32-1370)	Minimum distortion	(f)

(Note) Type 4 disc: SONY YEDS-18 Test Disc or equivalent.
LPF: Around 47kΩ+390pF or so.

REGLAGE

N°	ITEM	REGLAGE D'ENTREE	REGLAGE DE SORTIE	REGLAGE DE LA LECTURE	POINT D'ALIGNEMENT	ALIGNEMENT POUR	FIG
1	PUISSANCE LASER	-	Appliquer la section détecteur du compteur de puissance optique sur la lentille du capteur.	Court-circuiter les broches TEST et fournir l'alimentation pour entrer en mode de test. Presser la touche MANUAL S.(▶▶) pour déplacer le détecteur vers l'extérieur. Presser la touche CHECK pour vérifier que la diode émet de la lumière. S'assurer ensuite que l'affichage est " 03 ".	-	Sur l'alimentation de 0,1 à 0,3mW, quand le réseau de diffraction est correctement aligné avec le niveau RF de 1,5Vc-c ou plus et le niveau TE(servo ouvert)de 1.5vc-c ou plus, le détecteur est acceptable.	(a)
2	VCO	-	Raccorder un compteur de fréquence à PLCK(TP7). (X32-1370)	Presser la touche STOP. S'assurer que l'affichage est " 01 ".	L14 (X32-1370)	4,32MHz	(b)
3	BALANCE D'ERREUR D'ALIGNEMENT	Disque test Type 4	Raccorder un oscilloscope comme suit. CH1: RF (X29-1890 TP1) Presser CH2: TE (X32-1370 CN6 broche 1)	Presser la touche REPEAT pour ouvrir le tiroir. Charger un disque et fermer le tiroir en le poussant à la main. Presser ensuite la touche CHECK. S'assurer que l'affichage est"03".	TE BALANCE VR2 (X29-1890)	Symétrie entre les formes supérieure et inférieure ou DC=0±0,05V	(c)
4	BALANCE D'ERREUR DE MISE AU POINT	Disque test Type 4	Raccorder un oscilloscope comme suit. CH1: RF (X29-1890 TP1) CH2: TE (X32-1370 CN6 broche 1)	Presser la touche PLAY. S'assurer que l'affichage est " 05 ".	FE BALANCE VR1 (X29-1890)	Forme optimum	(d)
5	GAIN DE MISE AU POINT	Disque test Type 4 Appliquer un signal de 1kHz, 0,5Vrms à CN5 broche 2. (X32-1370)	Connecter un filtre passe-bas à CN5 broche 1 et raccorder un oscilloscope ou un voltmètre CA. (X32-1370)	Presser la touche PLAY. S'assurer que l'affichage est " 05 ".	GAIN DE MISE AU POINT VR6 (X32-1370)	50mVrms	(e)
6	GAIN D'ALIGNEMENT	Disque test Type 4 Appliquer un signal de 2kHz, 0,5Vrms à CN5 broche 4. (X32-1370)	Connecter un filtre passe-bas à CN5 broche 5 et raccorder un oscilloscope ou un voltmètre CA. (X32-1370)	Presser la touche PLAY. S'assurer que l'affichage est " 05 ".	GAIN DE MISE AU POINT VR7 (X32-1370)	50mVrms	(e)
7	DISTORSION DAC (MSB)	Disque test Type 4	Raccorder un compteur de distorsion sur la borne de sortie(FIXED).	Lire le signal 1kHz,-20dB dans la piste Nr 15.	VR1:G VR2:D (X32-1370)	Distorsion minimum	(f)
8	DISTORSION DAC (2SB)	Disque test Type 4	Raccorder un compteur de distorsion sur la borne de sortie(FIXED).	Lire le signal 100Hz, 0dB dans la piste Nr 4.	VR3:G VR4:D (X32-1370)	Distorsion minimum	(f)

(Remarque)Disque de type 4:Disque test SONY YEDS-18 ou équivalent.
Filtre passe-bas:environ 47kΩ+390pF.

ABGLEICH

NR.	GEGENSTAND	EINGANGS-EINSTELLUN	AUSGANGS-EINSTELLUNGE	SPIELER-EINSTELLUNG	ABGLEICH-PUNKT	ABGLEICHUNG	ABB.
1	LASERLEISTUNG	-	Das Sensorteil des optischen Leistungsmeters auf die Aufnehmerlinse ansetzen.	Die Stifte TEST kurzschließen und die Spannungsversorgung einschalten, um den Testmodus zu aktivieren. Die Taste MANUAL S.(▶▶)drücken, um den Abtaster nach außen zu bewegen. Die CHECK-Taste drücken, um zu prüfen, ob die LD Light abgibt. Dann sicherstellen, daß"03"angezeigt wird.	-	Bei der Leistung von 0,1 bis 0,3mW, wenn das beugungsgitter richtig mit dem RF-Pegel von 1,5Vs-s oder mehr und dem TE-Pegel(Servo offen) von 1,5Vs-s oder mehr ausgerichtet ist, ist der Abtaster zugänglich.	(a)
2	VCO	-	Einen Frequenzzähler an Stift PLCK(TP7) anschließen. (X32-1370)	Die STOP-Taste drücken und prüfen, daß" 01 " auf dem Display angezeigt wird.	L14 (X32-1370)	4,32MHz	(b)
3	SPURHALTEFEHLER-AUSGLEICH	Testdisc Typ 4	Ein Oszilloskop wie folgt anschließen: Kanal 1: RF (X29-1890 TP1) Kanal 2: TE (X32-1370 CN6 Stift 1)	Die REPEAT-Taste drücken, um den Träger zu öffnen. Eine Disc einlegen und den Träger mit der Hand schließen. Dann die CHECK-Taste drücken. Sicherstellen, das " 03 " angezeigt wird.	TE BALANCE VR2 (X29-1890)	Symmetrie zwischen oberen und unteren Mustern oder Gleichstrom DC=0±0,05V	(c)
4	FOKUS-FEHLERAUSGLEICH	Testdisc Typ 4	Ein Oszilloskop wie folgt anschließen: Kanal 1: RF (X29-1890 TP1) Kanal 2: TE (X32-1370 CN6 Stift 1)	Die PLAY-Taste drücken und sicherstellen, daß " 05 " angezeigt wird.	FOKUS-FEHLERAUSGLEICH VR1 (X29-1890)	Optimales Augenmuster	(d)
5	FOKUSVERSTÄRKUNG	Testdisc Typ 4 Ein Signal von 1kHz, 0,5Vrms an CN5 Stift 2 anlegen. (X32-1370)	Ein Tiefpaßfilter an CN5 Stift 1 und an dieses ein Oszilloskop oder Wechselstrom-Voltmeter anschließen. (X32-1370)	Die PLAY-Taste drücken und sicherstellen, daß " 05 " angezeigt wird.	FOKUSVERSTÄRKUNG VR6 (X32-1370)	50mVrms	(e)
6	SPURHALTE-VERSTÄRKUNG	Testdisc Typ 4 Ein Signal von 2kHz, 0,5Vrms an CN5 Stift 4 anlegen. (X32-1370)	Ein Tiefpaßfilter an CN5 Stift 4 und an dieses ein Oszilloskop oder Wechselstrom-Voltmeter anschließen. (X32-1370)	Die PLAY-Taste drücken und sicherstellen, daß " 05 " angezeigt wird.	SPURHALTE-VERSTÄRKUNG VR7 (X32-1370)	50mVrms	(e)
7	DAC-VERZERRUNG	Testdisc Typ 4	Einen Verzerrungsmesser an die Ausgangskleme(FIXED) anschließen.	Das 1kHz,-20dB Signal in Titel Nr.15 wiedergeben.	VR1:L VR2:R (X32-1370)	Minimale Verzerrung	(f)
8	DAC-VERZERRUNG	Testdisc Typ 4	Einen Verzerrungsmesser an die Ausgangskleme(FIXED) anschließen.	Das 100Hz, 0dB Signal in Titel Nr.4 wiedergeben.	VR3:L VR4:R (X32-1370)	Minimale Verzerrung	(f)

(Hinweis) Typ 4 Disc: SONY YEDS-18 Testdisc oder äquivalent.
Tiefpaßfilter:ca.47kΩ+390pF oder ähnlich.

ADJUSTMENT/REGLAGE/ABGLEICH

DIFFRACTION GRID ADJUSTMENT/REGLAGE DU RESEAU DE DIFFRACTION/BEUGUNGSGITTER-EINSTELLUNG

(Photo. 1)
(Photo. 1)
(Foto. 1)

- RF signal and T.Error signal after diffraction grating adjustment.
- Signal RF et signal T.Error après ajustement de réseau de diffraction.
- RF-Signal und T.Error-Signal nach Diffraktions-gitter-Einstellung.

(Photo. 2)
(Photo. 2)
(Foto. 2)

- RF signal and T.Error signal when there is small diffraction grating position error.
- The T.Error signal level is small, and the envelope is as shown in the diagram below.
- Signal RF et signal T.Error quand il y a une petite erreur de position du réseau de diffraction.
- Le niveau de signal T.Error est petit et l'envelope est telle qu'indiquée dans le diagramme ci-dessous.
- RF-Signal und T.Error-Signal bei kleinem Diffraktions-gitter-Positionierungsfehler.
- Der T.Error-Signalpegel ist klein, und die Hüll-kurve ist wie in der Abbildung unten.

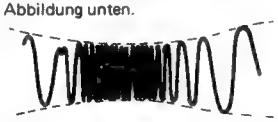

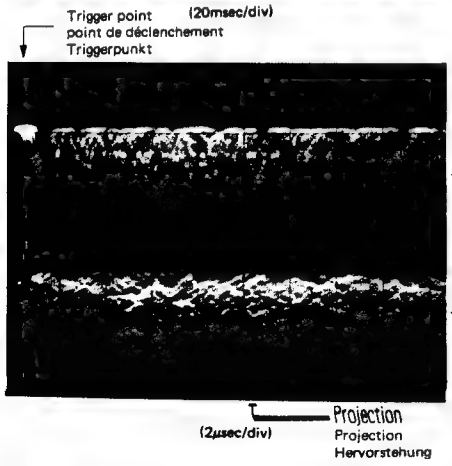

(Photo. 3)
(Photo. 3)
(Foto. 3)

- RF signal and T.Error signal in test mode (with focusing ON).
- When the sub-beam traces the same bit series as the main beam during diffraction grating adjustment, bringing the RF trigger point to the position shown in the Photo causes a "projection" to be observies in the T.Error waveform.
- Le signal RF et le signal T.Error en mode de test (avec la mise au point sur ON).
- Quand un faisceau auxiliaire tracela même série de bits que le faisceau principal pendant l'ajustement de réseau de diffraction, l'apport du point de déclenchement RF à la position indiquée dans la photo provoque une "projection" qui s'observe dans la forme d'onde d' T.Error.
- RF-Signal und T.Error-Signal im Testmodus (bei eingeschalteter Fokussierung).
- Wenn der Nebenstrahl die gleiche Bitreihe wie der Hauptstrahl während der Diffraktionsgitter-Einstellung verfolgt und den RF-Triggerpunkt auf die im Foto gezeigte Position bringt, wird eine "Hervorstehung" verursacht, die in der T.Error-Wellenform beobachtet werden kann.

DP-7010

ADJUSTMENT/REGLAGE/ABGLEICH

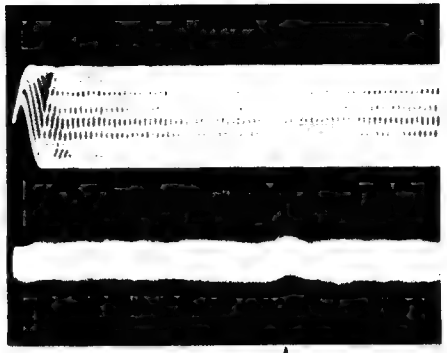

(Photo. 4)
(Photo. 4)
(Foto. 4)

- RF signal and E.Spot signal in test mode (PLAY).
- If the diffraction grating has been adjusted properly, the influence of triggering is observed on the E.Spot waveform of approx. 12μs after RF signal, in the form of a projection.
- Signal RF et signal E.Spot en mode de test (PLAY).
- Si le réseau de diffraction a été ajusté correctement, l'influence du déclenchement s'observe sur la forme d'onde E.Spot d'environ 12μs après le signal RF, sous la forme d'une projection.
- RF-Signal und E.Spot-Signal im Testmodus (PLAY).
- Wenn das Diffraktionsgitter richtig eingestellt wurde, wird der Einfluß des Triggers in der E.Spot-Wellenform etwa 12μs nach dem RF-Signal in der Form einer Hervorstehung beobachtet.

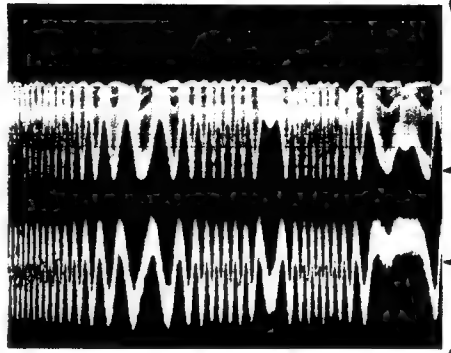

(Photo. 5)
(Photo. 5)
(Foto. 5)

- RF signal and T.Error signal; in test mode (Focusing ON). (Disc type 4)
- Adjust T.Error so that the waveform is symmetrical above and below 0V. (VR1 of X29-1890)
- Signal RF et signal T.Error; en mode test (mise au point ON). (Disque de type 4)
- Ajuster T.Error pour que la forme d'onde soit symétrique en-dessus et au-dessous de 0V. (VR1 de X29-1890)
- RF-Signal und T.Error-Signal; im Testmodus (Fokussierung eingeschaltet). (Disc-Typ 4)
- T.Error so einstellen, daß die Wellenform über und unter 0V symmetrisch ist. (VR1 von X29-1890)

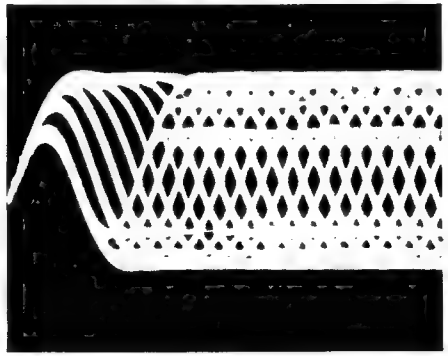

(Photo. 6)
(Photo. 6)
(Foto. 6)

- RF signal in test mode (PLAY).
- Perform the tangential and focusing offset adjustments so that each of the center cross points are focused into one point on the display. The crossing points above and below the center shall also be displayed clearly.
- Signal RF en mode de test (PLAY).
- Effectuer les ajustements d'offset tangentiel et de mise au point pour que chacun des points de croisement central soit mis au point sur un point de l'affichage. Les points de croisement au-dessus et en-dessous du centre doivent aussi être affichés clairement.
- RF-Signal im Testmodus (PLAY).
- Die Tangential- und Fokusversatz-Einstellungen so durchführen, daß jeder der mittleren Kreuzungspunkte in einem Punkt auf dem Display fokussiert wird. Auch die Kreuzungspunkte über und unter der Mitte müssen klar angezeigt werden.

ADJUSTMENT/REGLAGE/ABGLEICH

(a) Laser Power

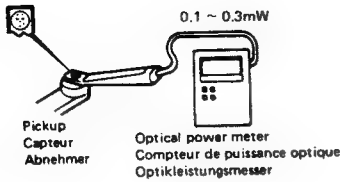

(e) Focus Gain and Tracking Gain

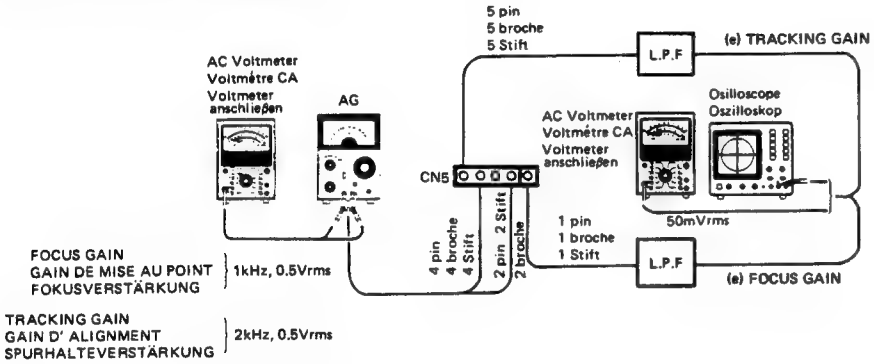

(f) DAC Distortion

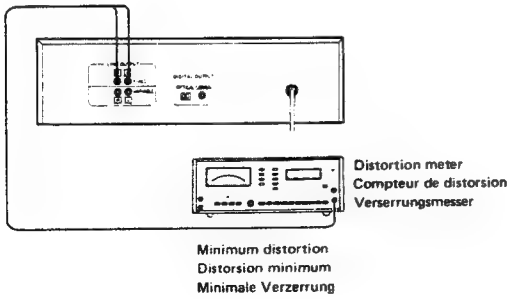

PC BOARD (COMPONENT SIDE VIEW)

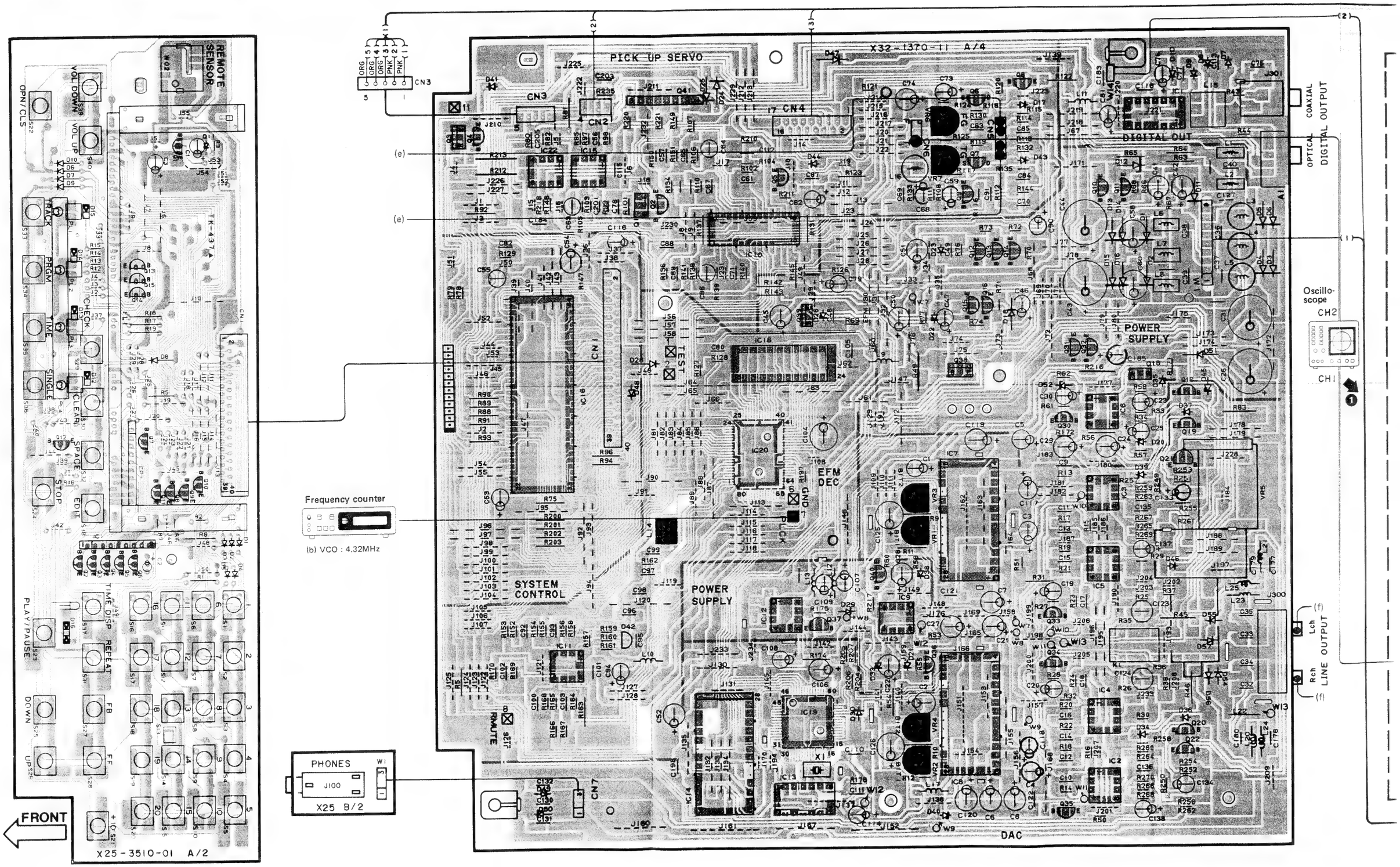

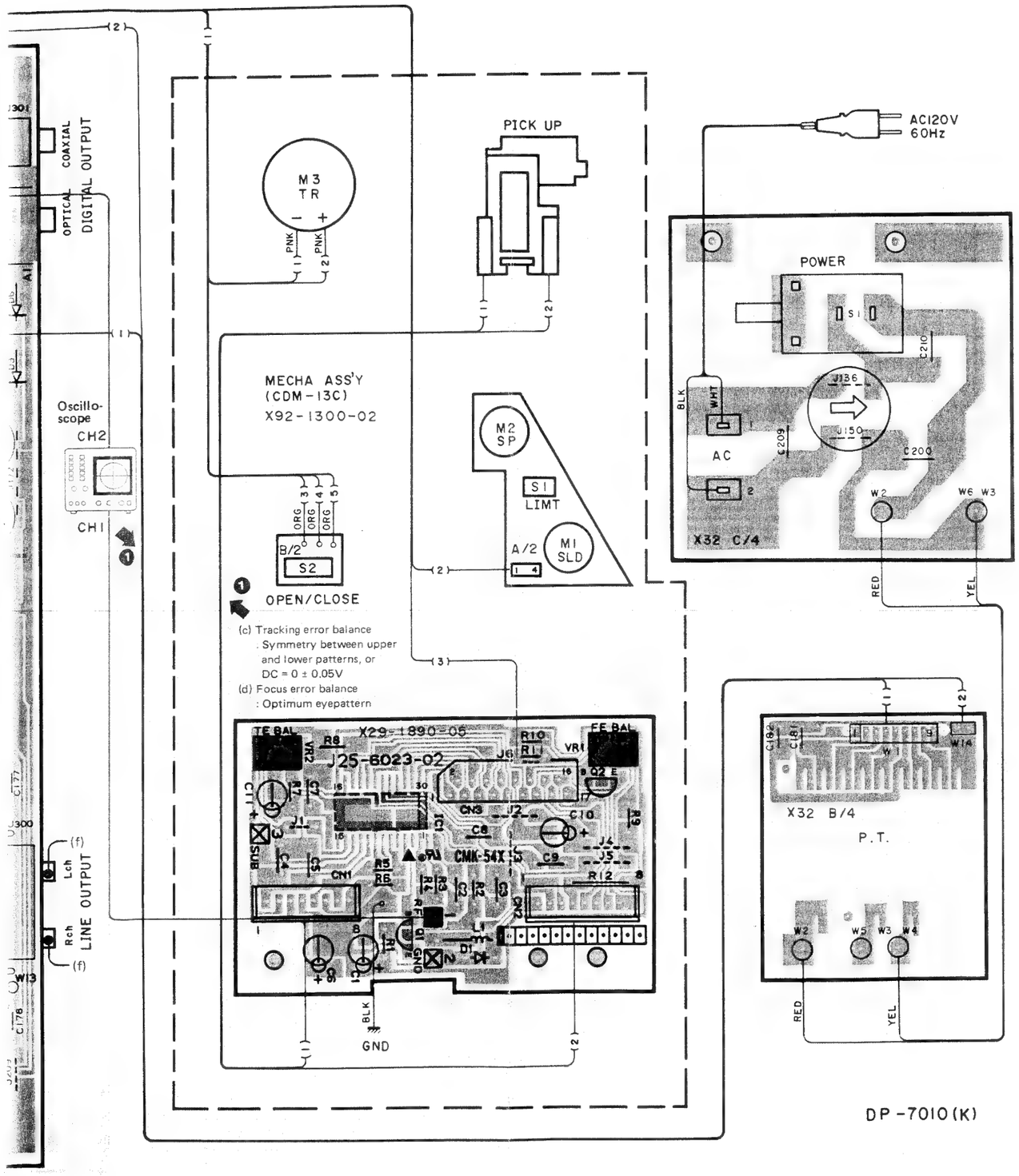

DP-7010(K)

Refer to the schematic diagram for the values of resistors and capacitors.

(X32-137X-XX)

IC1

1	5.0V
2~4	2.5V
5	5.0V
6	2.5V
7	0V
8	2.5V
9	5.0V
10~12	2.5V
13,14	5.0V

IC2~5

1~3	0V
4	-11.5V
5~7	0V
8	11.5V

IC6

1~3	0V
4	-11.5V
5,6	5.0V
7	10.2V
8	11.5V

IC7

1	0.6V
2	5.0V
3	-5.7V
4	2.9V
5~8	0V
9	-11.5V
13	5.0V
15	3.2V
16	1.6V
17	3.5V
19	0V
20	-11.5V
26,27	-10.5V
28	-9.9V

IC8

1	0.5V
2	5.0V
3	-5.5V
4	3.0V
5~8	0V
9	-11.5V
13	5.0V
15	3.2V
16	1.7V
17	3.5V
19	0V
20	-11.5V
26,27	-10.5V
28	-9.9V

IC9

1	-8.8V
2,3	0V
4	-11.5V
5,6	5.0V
7	9.0V
8	11.5V

IC10

1~4	0V
5	5.0V(0V)
6	0V
8~10	5.0V
11~13	0V
14	-4.3V
15	5.0V
16	0V
17	-5.0V
19,20	0V
21	-2.4V(0.8V)
22	0V
23	-0.6V
24,25	0V
26	5.0V
27	-0.6V
28~30	0V

IC11

1	-0.4V
2	2.5V
3	2.5V(1.5V)
4	-9.9V
5	0V(2.9V)
6	0V(2.2V)
7	-0.6V(0.8V)
8	10.5V

IC12

4	-11.1V
5,6	5.0V
7	5.5V
8	10.5V

IC13

7	0V
10	2.0V
12	3.6V
13	2.3V

IC14

1	0V
2	2.5V
3,4	5.0V
5	0V
6	2.2V
8	0V
9	2.3V
10~13	5.0V
14	4.8V
15,16	5.0V
17	0V
18	5.0V
21	0V
22	5.0V
23	0V
25	3.8V
28	2.5V

IC15

1~3	0V
4	-9.5V
5~7	0V
8	9.8V

IC16

1~4	-3.5V
5	5.0V(0V)
6	2.5V
7	0V
8	0V(5.0V)
9	4.8V
10	0V
11	0V(4.2V)
12	0V(5.0V)
13	5.0V(0V)
14	0V
15	5.0V
18,19	5.0V
20~24	0V
25~27	5.0V
28	5.0V(0V)
29	0V
30	2.4V
35~38	0V
39	5.0V
40~50	-27.6V
51,52	0V
53	-5.0V
54	-21.5V
55	-15.5V
56	-30.5V
57	-5.0V
58	-18.4V
59	-6.7V
60,61	-3.0V
62,63	-9.4V
64	5.0V

IC18

4~8	2.6V
9,10	2.8V
11	0.7V
12	0V
13,14	0.7V
15	2.8V
16	2.2V
17	4.4V
18	2.4V
19	2.5V
20	2.4V
21	4.5V
22	2.4V
24	5.0V

IC19

1	1.7V
2	3.6V
4,5	0V
6	5.0V
14	5.0V
23	5.0V
33	2.0V
41	5.0V
42	4.8V
47	3.6V
48	3.8V
50	0V
51	5.0V
53	5.0V
57,58	2.2V

IC20

1~4	0V
5	4.1V
6	0V
8	2.4V
9	2.3V
10	0V
11	2.4V
12	0V
13~16	4.9V
17	0V
18,19	4.9V
20	0V
23,24	0V
25	2.4V
27	2.4V
28,29	0V
33	5.0V
49	4.3V
50	2.3V
51	2.2V
53	2.0V
54	2.5V
57	5.0V

IC22

1~3	0V
4	-9.9V
5~7	0V
8	9.8V

	B	C	E
Q1	0V	-9.9V	0.8V
Q2	0V	9.8V	0.8V
Q3	-	9.8V	0V
Q4	-	-9.8V	0V
Q5	0V	0.6V	0V
Q8	4.5V	5.0V	5.0V
Q9	0.6V	2.5V	0V
Q10	-5.5V	-30.1V	-4.9V
Q11	-30.1V	-39.2V	-30.6V
Q12	-0.6V	-5.6V	0V
Q13,14	-5.6V	-11.1V	-4.9V
Q15	0.7V	0V	0V
Q16	0V	5.0V	0V
Q17	11.4V	0V	11.5V
Q18	12.1V	17.9V	11.5V
Q19	0.6V	17.9V	0V
Q20	0.7V	17.9V	0V
Q21	-0.6V	-17.9V	0V
Q22	-0.7V	-17.9V	0V
Q30	-12.1V	-17.9V	-11.5V
Q31	0V	10.5V	0V
Q32	0V	-4.9V	0V
Q33,34	0.7V	0V	0V
Q35	7.9V	11.3V	11.5V
Q36	17.3V	5.0V	17.9V
Q37	5.5V	10.5V	5.0V
Q38	5.8V	10.5V	5.2V
Q39	8.0V	14.8V	7.4V
Q40	-17.4V	-11.5V	-17.9V

	G	S	D
Q6,7	0V	0V	0V

Q41

1	9.8V
2~4	0V
5	-9.9V
6~8	0V

(X29-1890-05)

IC1

1	0V	18~20	0V
2	0V(1.5V)	21	-4.6V
3	0V	22,23	0V
4	3.8V	24	0V(-2.8V)
5	0V(3.8V)	25	0V
6	-4.8V	26	0.4V(2.4V)
7~14	0V	27	4.3V(2.4V)
15	0V(-3.6V)	28	0V(4.5V)
16	1.5V(-3.6V)	29	5.0V(0V)
17	-4.8V	30	5.0V

	B	C	E
Q1	0V(3.8V)	0V(1.7V)	4.5V
Q2	0V	0V	0V

(X25-3510-01)

IC1

1~6	0V
7	2.4V
8	0V
9	4.8V

	B	C	E
Q1	5.5V	7.4V	4.8V
Q2~6	0V	4.8V	4.8V
Q7~11	-26.5V	4.8V	-25.7V
Q12~14	0V	7.4V	0V
Q15	0.7V	0.3V	0V

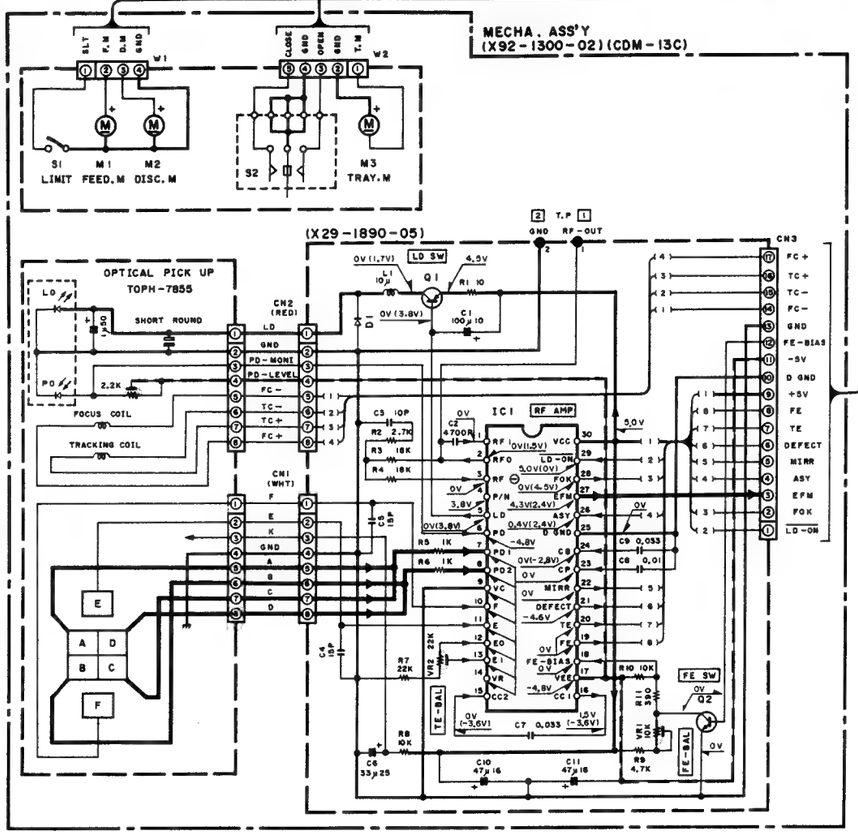

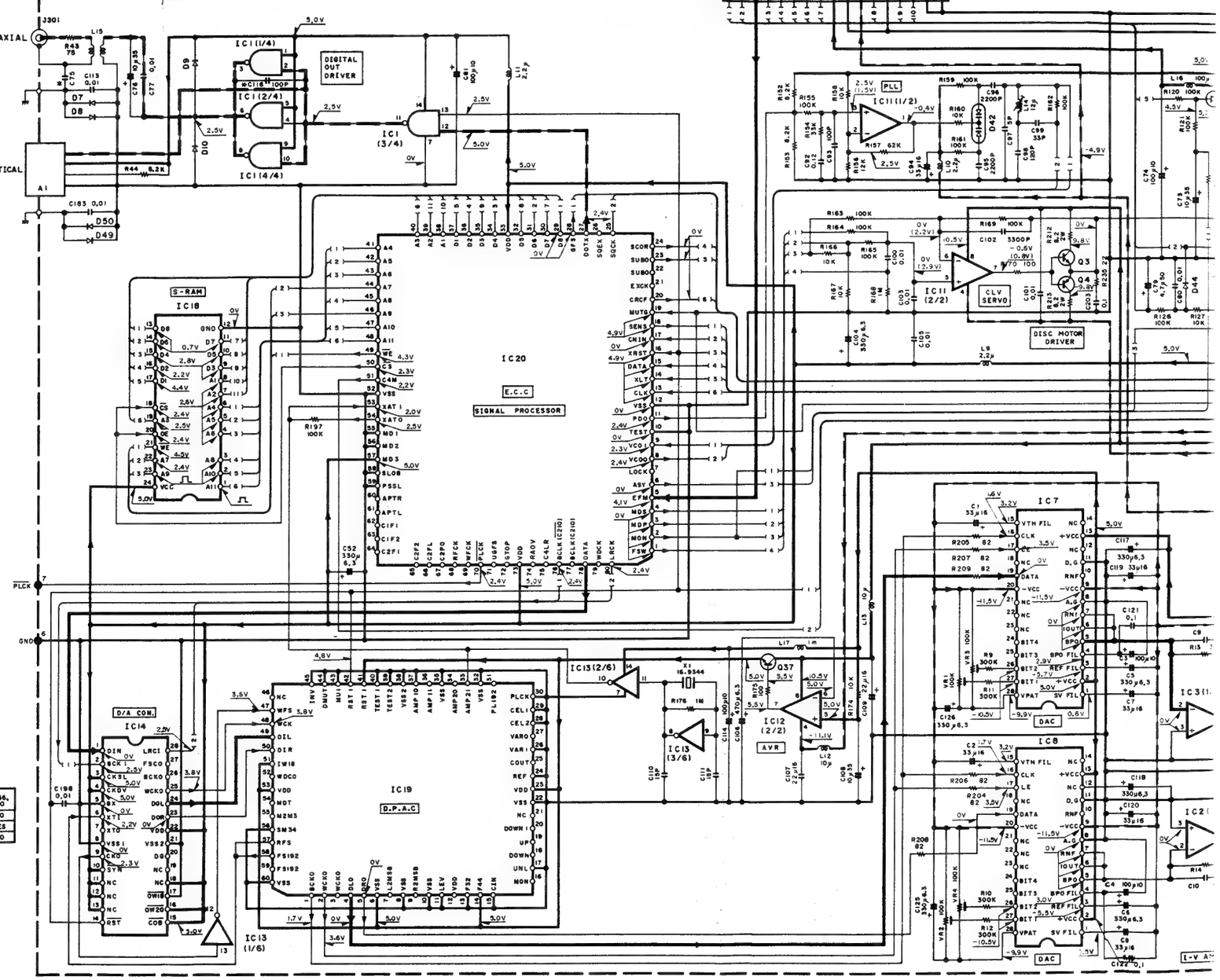

(X29-1890-05)

IC1 : CXA1081M

Q1 : 2SA1426
Q2 : 2SC945(A)(Q,P)

D1 : ISS133 or ISS176

(X32-137X-XX)

IC1	: TC74HC00P
IC2~5	: NJM4565D
IC6,9,12	: M5218P
IC7,8	: PCM58P
IC10	: CXA1244S
IC11,15,22	: NJM4558D
IC13	: TC74HC04P
IC14	: SM5813AP
IC16	: μPD75212ACW-052
IC18	: CXK5816SP-15L
IC19	: TC17G008AF-8060
IC20	: CXD1125Q or CXD1125Q
Q1	: 2SB941
Q2	: 2SC3940A
Q3,38,39	: 2SD1266(Q,P)
Q4,11	: 2SA1534A
Q5	: DTC124EN
Q6,7	: 2SK246(Y,GR)
Q8,10,12	: 2SA733(A)(Q,P) or 2SA933S(Q,R)
Q9,15,16	: 2SC945(A)(Q,P) or 2SC1740S(Q,R)
Q13,14,21,22,30	: 2SA954(L,K)
Q17,35	: DTA124EN
Q18	: 2SD882(Q,P,E) : K,P Type
Q18	: 2SD1266(Q,P) : U,M,UE,X,T,E Type
Q19,20,37,40	: 2SC2003(L,K)
Q31	: 2SC3666
Q32	: 2SA1426
Q33,34	: 2SC2878(B)
Q36	: 2SB772(Q,P,E)
Q41	: STA341M

D1~6,11,13~16,24,25,47 : S5566B

D7~10,17,18,23,28,34,37,39,41,43,44,48~50,54~57 : HSS104 or ISS133

D12,26,36,40,45 : HZS8.2N(B2) or RD8.2ES(B2)

D20,22,33 : HZS5.1S(B2) or RD5.1JS(B2)

D21,38 : HZS15N(B) or RD15ES(B)

D35,52 : HZS11N(B) or RD11ES(B)

D42 : ISV147

D46,51 : HSS104A or ISS131

(X32-137X-XX)

DESTINATION \ Ref. No.		W14 L18	C116 181,182 209	C75	L20,21 24,25	J136, 150
0-11	K,P	YES	YES	0.01μ	100μ	NO
0-21	U,M,UE	NO	NO	100P	1m	YES
2-71	X,T,E	YES	YES	0.01μ	100μ	NO

DIGITAL LINE
SIGNAL LINE
GND LINE
+B LINE
−B LINE

DTA124EN DTC124EN 2SA733(A) 2SA954 2SA1534A 2SC945(A) 2SC2003 2SC2878 2SC3940A 2SB772 2SB941 2SD1266 2SA1426 2SC3666 2SA933S 2SC1740S NJM4558D TC74HC00P TC74HC04P PCM58P M5218P NJM4565D STA341M 2SK246 SM5813AP CXA1244S CXK5816SP-15L CXA1081M

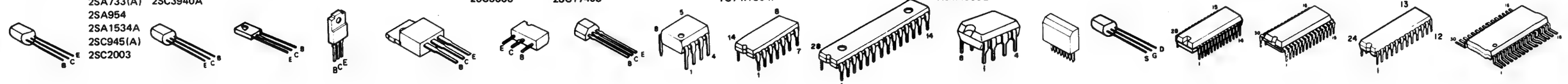

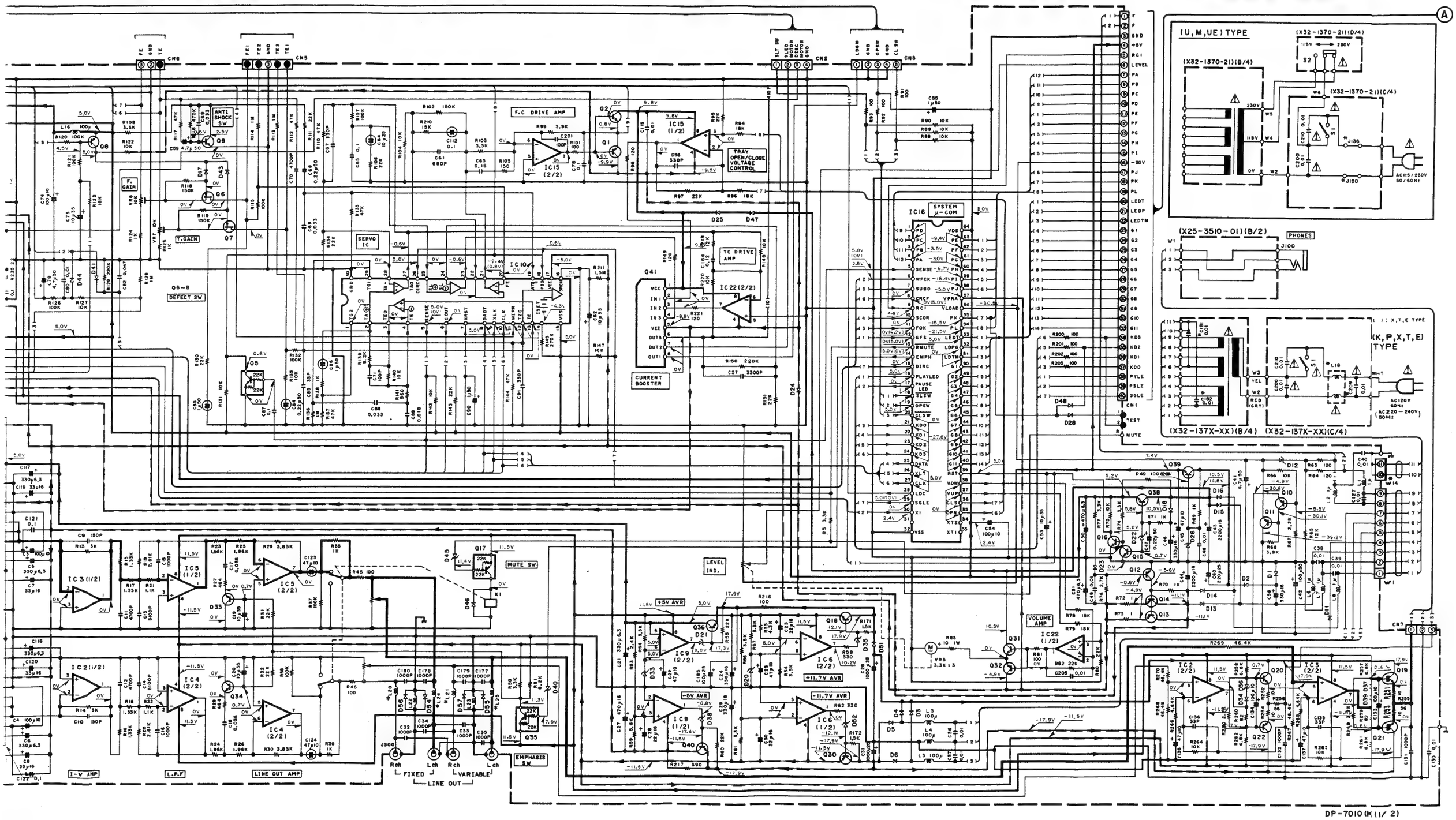

DP-7010(K)(1/2)

XA1081M

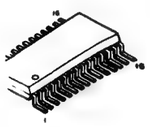

CXD1125Q
CXD1125QZ

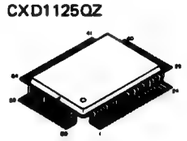

TC17G008AF-8060

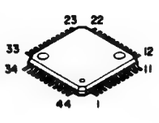

μPD75212ACW-052

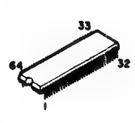

CAUTION: For continued safety, replace safety critical components only with manufacturer's recommended parts (refer to parts list). ⚠Indicates safety critical components. To reduce the risk of electric shock, leakage-current or resistance measurements shall be carried out (exposed parts are acceptably insulated from the supply circuit) before the appliance is returned to the customer.

- DC voltages are as measured with a high impedance voltmeter. Values may vary slightly due to variations between individual instruments or/and units.
- Les tensions c.c. doivent être measurées avec un voltmètre à haute impédance. Les valeurs peuvent différer légèrement du fait des variations inhérentes aux appareils et aux instruments de mesure individuels.
- Die angegebenen Gleichspannungswerte wurden mit einem hochohmigen Voltmeter gemessen. Dabei schwanken die Meßwerte aufgrund von Unterschieden zwischen einzelnen Instrumenten oder Geräten u.U. geringfügig.

Y22-1580-11

DP-7010

KENWOOD

V W X Y Z AA AB AC AD AE AF

A

(X25-3510-01)(A/2)

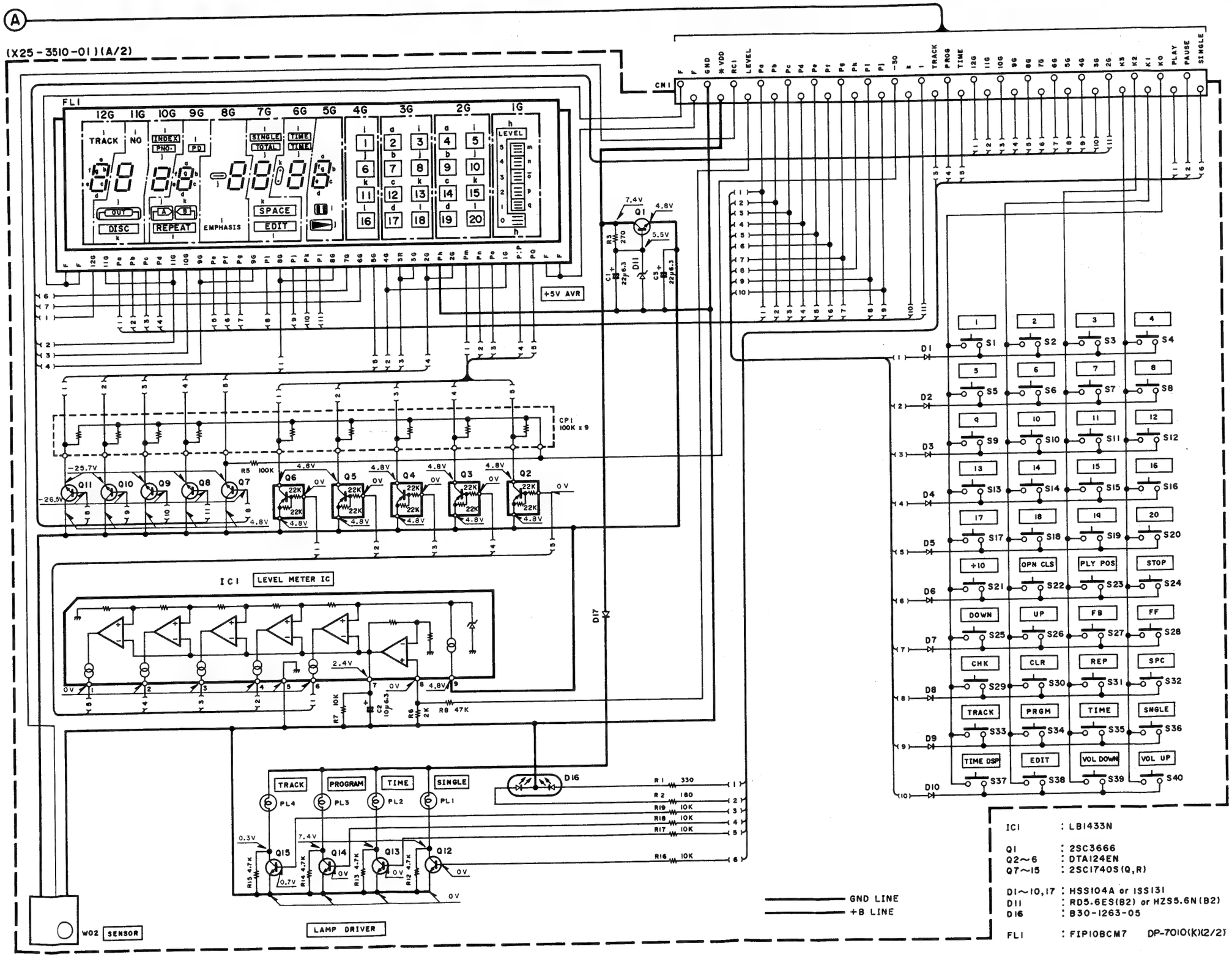

DTA124EN

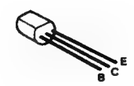

2SC3666

2SC1740S

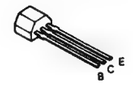

LB1433N

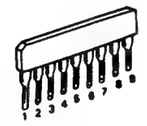

CAUTION: For continued safety, replace safety critical components only with manufacturer's recommended parts (refer to parts list). ⚠Indicates safety critical components. To reduce the risk of electric shock, leakage-current or resistance measurements shall be carried out (exposed parts are acceptably insulated from the supply circuit) before the appliance is returned to the customer.

- DC voltages are as measured with a high impedance voltmeter. Values may vary slightly due to variations between individual instruments or/and units.
- Les tensions c.c. doivent être measurées avec un voltmètre à haute impédance. Les valeurs peuvent différer légèrement du fait des variations inhérentes aux appareils et aux instruments de mesure individuels.
- Die angegebenen Gleichspannungswerte wurden mit einem hochohmigen Voltmeter gemessen. Dabei schwanken die Meßwerte aufgrund von Unterschieden zwischen einzelnen instrumenten oder Geraten u.U. geringfügig.

IC1	: LB1433N	
Q1	: 2SC3666	
Q2~6	: DTA124EN	
Q7~15	: 2SC1740S(Q,R)	
D1~10,17	: HSS104A or 1SS131	
D11	: RD5.6ES(B2) or HZS5.6N(B2)	
D16	: B30-1263-05	
FL1	: FIP10BCM7	DP-7010(K)(2/2)

Y22-1580-11

DP-7010

KENWOOD

AF

DP-7010

EXPLODED VIEW (MECHANISM)

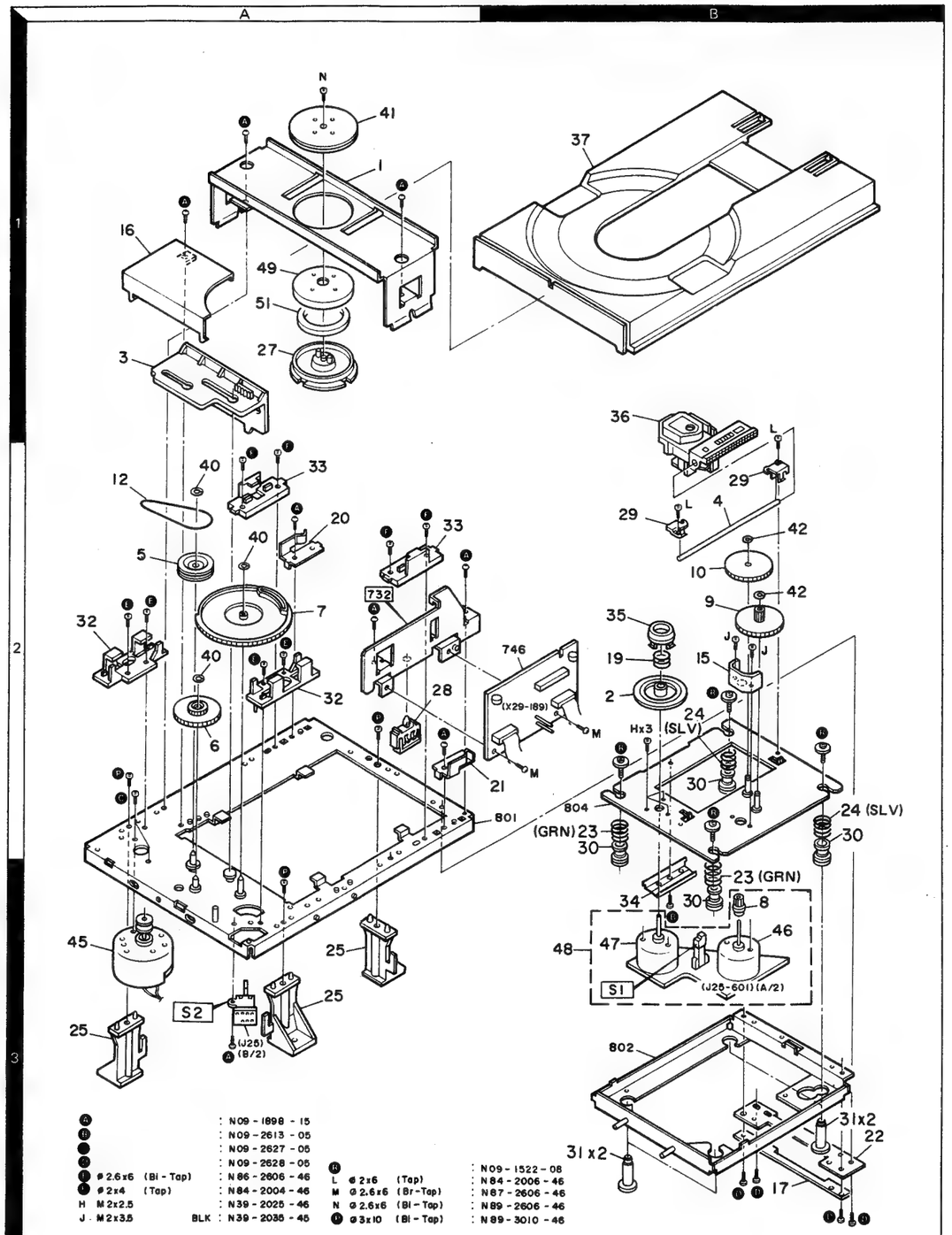

Parts with the exploded numbers larger than 700 are not supplied.

DP-7010

EXPLODED VIEW (UNIT)

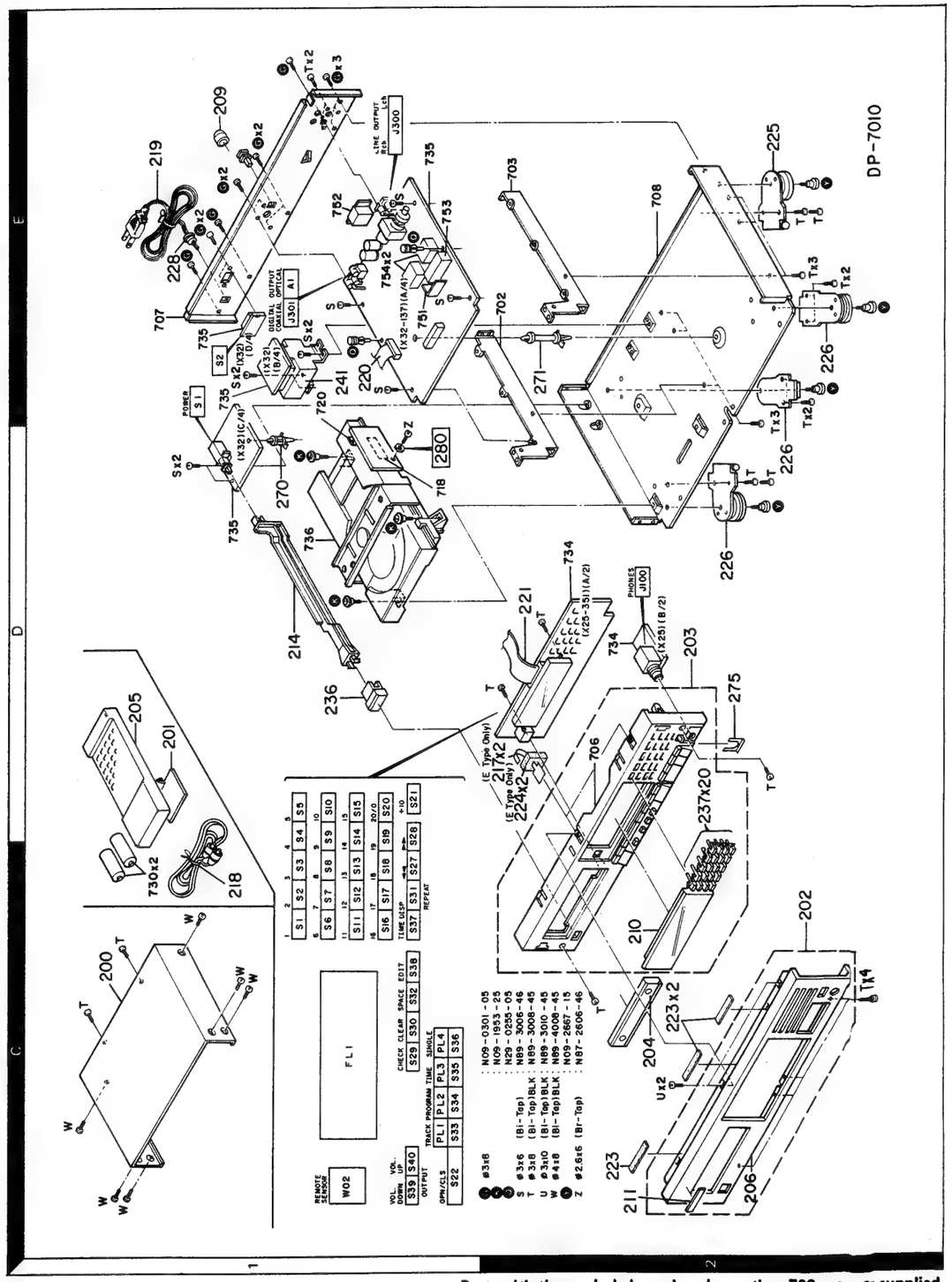

Parts with the exploded numbers larger than 700 are not supplied.

e safety critical com-
mended parts (refer
al components. To
current or resistance
ed parts are accepta-
fore the appliance is

high impedance
due to variations
units.
es avec un volt-
peuvent différer
inhérentes aux
sure individuels.
rte wurden mit
emessen. Dabei
n Unterschieden
er Geräten u.U.

P-7010
NWOOD

DP-7010

PARTS LIST

* New Parts
Parts without **Parts No.** are not supplied.
Les articles non mentionnes dans le **Parts No.** ne sont pas fournis.
Teile ohne **Parts No.** werden nicht geliefert.

	Ref. No. 参照番号	Address 位置	New Parts 新	Parts No. 部品番号	Description 部品名／規格	Destination 仕向	Remarks 備考
				DP-7010			
	200	1C		A01-1514-02	METALLIC CABINET		
	201	1D		A09-0078-08	BATTERY COVER(REMOTE CONTROL)		
	202	2C	*	A20-5811-03	PANEL ASSY	KPUMUE	
	202	2C	*	A20-5811-03	PANEL ASSY	X	
	202	2C	*	A20-5812-03	PANEL ASSY	TE	
	203	2D	*	A22-1046-12	SUB PANEL ASSY		
	204	2C		A29-0139-03	PANEL (TRAY)		
	205	1D		A70-0251-05	REMOTE CONTROLLER ASSY		
	206	2C	*	A20-5656-02	PANEL	KPUMUE	
	206	2C	*	A20-5656-02	PANEL	X	
	206	2C	*	A20-5733-02	PANEL	TE	
	209	1E		B09-0068-05	CAP		
	210	2C		B10-0979-13	FRONT GLASS		
	211	2C		B43-0287-04	KENWOOD BADGE		
	-			B46-0092-03	WARRANTY CARD	K	
	-			B46-0094-03	WARRANTY CARD	UUE	
	-			B46-0095-03	WARRANTY CARD	UUE	
	-			B46-0096-13	WARRANTY CARD	X	
	-			B46-0121-03	WARRANTY CARD	P	
	-			B46-0122-13	WARRANTY CARD	E	
	-			B46-0143-03	WARRANTY CARD	T	
	-		*	B50-9239-10	INSTRUCTION MANUAL(ENGLISH)		
	-		*	B50-9240-10	INSTRUCTION MANUAL(FRENCH)	PME	
	-		*	B50-9241-00	INSTRUCTION MANUAL(SPANISH)	M	
	-		*	B50-9242-10	INSTRUCTION MANUAL(G,D,I)	E	
	-			B58-0223-04	CAUTION CARD (PRE-SET 120V)	U	
	-			B58-0513-04	CAUTION CARD (PRESET220-240)	UE	
	214	1D		D21-1494-03	EXTENSION SHAFT		
	217	2D	*	E29-0333-04	LEAD PLATE	E	
	218	1C		E30-0505-05	AUDIO CORD		
⚠	219	1E		E30-0459-05	AC POWER CORD	E	
⚠	219	1E		E30-0780-05	AC POWER CORD	KP	
⚠	219	1E		E30-0812-05	AC POWER CORD	UMUE	
⚠	219	1E		E30-1341-05	AC POWER CORD	X	
⚠	219	1E		E30-1416-05	AC POWER CORD	T	
	220	1E		E31-4362-05	WIRING HARNESS (FLAT CABLE-M)		
	221	2D		E31-4820-05	WIRING HARNESS (FLAT CABLE)		
	223	2C		G11-0155-14	SOFT TAPE (40X9X2)		
	224	2D	*	G13-0242-04	CUSHION	E	
	-		*	H01-8342-04	ITEM CARTON CASE		
	-			H10-3729-12	POLYSTYRENE FOAMED FIXTURE(L)		
	-			H10-3730-12	POLYSTYRENE FOAMED FIXTURE(R)		
	-			H20-0554-04	PROTECTION COVER	M	
	-			H25-0232-04	PROTECTION BAG (235X350X0.03)		
	-			H25-0361-04	PROTECTION BAG	KPUUEX	
	-			H25-0361-04	PROTECTION BAG	TE	
	225	2E	*	J02-0396-15	INSULATOR ASSY		
	226	2D,2E	*	J02-0397-15	INSULATOR ASSY		
⚠	228	1E		J42-0083-05	POWER CORD BUSHING		
	270	1D		J19-0506-05	UNIT HOLDER		

E: Scandinavia & Europe K: USA P: Canada
U: PX(Far East, Hawaii) T: England M: Other Areas
UE: AAFES(Europe) X: Australia

⚠ indicates safety critical components.

PARTS LIST

* New Parts
Parts without **Parts No.** are not supplied.
Les articles non mentionnes dans le **Parts No.** ne sont pas fournis.
Teile ohne **Parts No.** werden nicht geliefert.

Ref. No. 参照番号	Address 位置	New Parts 新	Parts No. 部品番号	Description 部品名／規格	Destination 仕向	Remarks 備考
271	2E		J19-0581-05	UNIT HOLDER		
275	2D		J21-3326-05	JACK MOUNTING HARDWARE		
-			J61-0307-05	WIRE BAND	T	
236	1D		K29-3363-14	KNOB (POWER)		
237	2D		K29-3493-04	KNOB (1-2D)		
⚠ 241	1E	*	L01-5711-05	POWER TRANSFORMER	KP	
⚠ 241	1E	*	L01-5712-05	POWER TRANSFORMER	XTE	
⚠ 241	1E	*	L01-5714-05	POWER TRANSFORMER	UMUE	
G	1E		N09-0301-05	TAPTITE SCREW (3X8,+BIND)		
K	1D		N09-1953-25	MACHINE SCREW		
M	1E		N29-0255-05	PUSH RIVET		
Y	2D,2E		N09-2667-15	STEPPED SCREW		
OPERATION UNIT (X25-2510-01)						
D16		*	B30-1263-05	LED		
PL1 -4			B30-1207-05	LAMP		
C1			CE04JW0J220M	ELECTRO 22UF 6.3WV		
C2			CE04JW0J100M	ELECTRO 10UF 6.3WV		
C3			CE04JW0J220M	ELECTRO 22UF 6.3WV		
CN1			E10-4002-05	FLAT CABLE CONNECTOR		
J100	2D		E11-0190-05	PHONE JACK		
CP1		*	R90-0463-05	MULTIPLE RESISTOR		
S1 -40			S40-1064-05	PUSH SWITCH		
D1 -10			HSS104A	DIODE		
D1 -10			1SS131	DIODE		
D11			HZS5.6N(B2)	ZENER DIODE		
D11			RD5.6ES(B2)	ZENER DIODE		
D17			HSS104A	DIODE		
D17			1SS131	DIODE		
FL1	1C		FIP10BCM7	FLUORESCENT INDICATOR TUBE		
IC1			LB1433N	IC(LEVEL METER DRIVER)		
Q1			2SC3666	TRANSISTOR		
Q2 -6			DTA124EN	DIGITAL TRANSISTOR		
Q7 -15			2SC1740S(Q,R)	TRANSISTOR		
W02	1C		W02-0973-05	ELECTRIC CIRCUIT MODULE		
CONTROL CIRCUIT UNIT (X29-1890-05)						
C1			CE04JW1A101M	ELECTRO 100UF 10WV		
C2			CF92FV1H472J	MF 4700PF J		
C3			CC45FSL1H100D	CERAMIC 10PF D		
C4			CC45FSL1H150J	CERAMIC 15PF J		
C5			CC45FSL1H150J	CERAMIC 15PF J		
C6			CE04JW1E330M	ELECTRO 33UF 25WV		
C7			CF92FV1H333J	MF 0.033UF J		
C8			CF92FV1H103J	MF 0.010UF J		
C9			CF92FV1H333J	MF 0.033UF J		
C10 ,11			CE04KW1C470M	ELECTRO 47UF 16WV		
CN3			E10-1705-05	FLAT CABLE CONNECTOR		
L1			L40-1001-17	SMALL FIXED INDUCTOR(10UH,K)		
280	1D	*	N19-1205-05	FLAT WASHER		

E: Scandinavia & Europe K: USA P: Canada
U: PX(Far East, Hawaii) T: England M: Other Areas
UE: AAFES(Europe) X: Australia

⚠ indicates safety critical components.

DP-7010

PARTS LIST

* New Parts
Parts without **Parts No.** are not supplied.
Les articles non mentionnes dans le **Parts No.** ne sont pas fournis.
Teile ohne **Parts No.** werden nicht geliefert.

Ref. No. 参照番号	Address 位置	New Parts 新	Parts No. 部品番号	Description 部品名／規格	Destination 仕向	Remarks 備考
VR1			R12-3100-05	TRIMMING POT.(10K)FE BAL		
VR2			R12-3101-05	TRIMMING POT.(22K)TE BAL		
D1			1SS133	DIODE		
D1			1SS176	DIODE		
IC1			CXA1081M	IC(RF AMP)		
Q1			2SA1426	TRANSISTOR		
Q2			2SC945(A)(Q,P)	TRANSISTOR		
CD PLAYER UNIT (X32-137X-XX) 0-11 : K,P 0-21 : U,M,UE 2-71 : X,T,E						
C1 ,2			CE04KW1C330M	ELECTRO 33UF 16WV		
C3 ,4			CE04KW1A101M	ELECTRO 100UF 10WV		
C5			CE04KW0J331M	ELECTRO 330UF 6.3WV		
C6			CE04KW0J331M	ELECTRO 330UF 6.3WV		
C7 ,8			CE04KW1C330M	ELECTRO 33UF 16WV		
C9 ,10			CF92FV1H151K	MF 150PF K		
C11 ,12			CF92FV1H472J	MF 4700PF J		
C13 ,14			CF92FV1H512J	MF 5100PF J		
C15 ,16			CF92FV1H102J	MF 1000PF J		
C17 ,18			CF92FV1H363J	MF 0.036UF J		
C19 ,20			CE04KW1V100M	ELECTRO 10UF 35WV		
C21			CE04KW0J331M	ELECTRO 330UF 6.3WV		
C22			CE04KW1A470M	ELECTRO 47UF 10WV		
C23			CE04KW1C220M	ELECTRO 22UF 16WV		
C24			CE04KW1C331M	ELECTRO 330UF 16WV		
C25			CE04KW1A470M	ELECTRO 47UF 10WV		
C26			CE04KW1E102M	ELECTRO 1000UF 25WV		
C27			CE04KW1C471M	ELECTRO 470UF 16WV		
C28			CE04KW1C220M	ELECTRO 22UF 16WV		
C29			CE04KW1C331M	ELECTRO 330UF 16WV		
C30			CE04KW1C220M	ELECTRO 22UF 16WV		
C31			CE04KW1E102M	ELECTRO 1000UF 25WV		
C32 -35			CF92FV1H102J	MF 1000PF J	KPUMUE	
C32 -35			CQ09FS1H102J	POLYSTY 1000PF J	XTE	
C36 -40			CK45FF1H103Z	CERAMIC 0.010UF Z		
C41			CE04KW1H4R7M	ELECTRO 4.7UF 50WV		
C42			CE04KW1H101M	ELECTRO 100UF 50WV		
C43 ,44			CE04KW1C222M	ELECTRO 2200UF 16WV		
C45			CE04KW1A470M	ELECTRO 47UF 10WV		
C46			CE04KW1C331M	ELECTRO 330UF 16WV		
C47			CE04KW1HR22M	ELECTRO 0.22UF 50WV		
C48 ,49			CK45FF1H103Z	CERAMIC 0.010UF Z		
C50 ,51			CE04KW0J471M	ELECTRO 470UF 6.3WV		
C52			CE04KW0J331M	ELECTRO 330UF 6.3WV		
C53			CE04KW1V100M	ELECTRO 10UF 35WV		
C54			CE04KW1A101M	ELECTRO 100UF 10WV		
C55			C90-1349-05	NP-ELEC 1UF 50WV		
C56			CC45FSL1H331J	CERAMIC 330PF J		
C57			CF92FV1H332J	MF 3300PF J		
C58			CE04KW1C331M	ELECTRO 330UF 16WV		
C59			CE04KW1H4R7M	ELECTRO 4.7UF 50WV		
C60			CE04KW1E221M	ELECTRO 220UF 25WV		
C61			CK45FB1H681K	CERAMIC 680PF K		
C62			CE04KW1V100M	ELECTRO 10UF 35WV		
C63			CF92FV1H184J	MF 0.18UF J		
C64			C90-1332-05	NP-ELEC 10UF 25WV		

E: Scandinavia & Europe K: USA P: Canada
U: PX(Far East, Hawaii) T: England M: Other Areas
UE: AAFES(Europe) X: Australia

⚠ indicates safety critical components.

PARTS LIST

× New Parts
Parts without **Parts No.** are not supplied.
Les articles non mentionnes dans le **Parts No.** ne sont pas fournis.
Telle ohne **Parts No.** werden nicht geliefert.

Ref. No. 参照番号	Address 位置	New Parts 新	Parts No. 部品番号	Description 部品名／規格			Destination 仕向	Remarks 備考
C65			CF92FV1H104J	MF	0.10UF	J		
C67			CC45FSL1H331J	CERAMIC	330PF	J		
C68			CE04KW1HR22M	ELECTRO	0.22UF	50WV		
C69			CF92FV1H333J	MF	0.033UF	J		
C70			CF92FV1H472J	MF	4700PF	J		
C71			CC45FSL1H101J	CERAMIC	100PF	J		
C73			CE04KW1V100M	ELECTRO	10UF	35WV		
C74			CE04KW1A101M	ELECTRO	100UF	10WV		
C75			CC45FSL1H101J	CERAMIC	100PF	J	UMUE	
C75			CK45FF1H103Z	CERAMIC	0.010UF	Z	KPXTE	
C76			CE04KW1V100M	ELECTRO	10UF	35WV		
C77			CK45FF1H103Z	CERAMIC	0.010UF	Z		
C78			CF92FV1H104J	MF	0.10UF	J		
C79			CE04KW1H4R7M	ELECTRO	4.7UF	50WV		
C80			CK45FF1H103Z	CERAMIC	0.010UF	Z		
C81			CE04KW1A101M	ELECTRO	100UF	10WV		
C82			CK45FF1H473Z	CERAMIC	0.047UF	Z		
C83			C90-1349-05	NP-ELEC	1UF	50WV		
C84			C90-1456-05	NP-ELEC	0.22UF	50WV		
C85			CC45FSL1H330J	CERAMIC	33PF	J		
C86			C90-1349-05	NP-ELEC	1UF	50WV		
C87			CF92FV1H104J	MF	0.10UF	J		
C88			CF92FV1H333J	MF	0.033UF	J		
C89			CF92FV1H183J	MF	0.018UF	J		
C90			CE04KW1H010M	ELECTRO	1.0UF	50WV		
C91			CC45FSL1H331J	CERAMIC	330PF	J		
C92			CF92FV1H124J	MF	0.12UF	J		
C93			CC45FSL1H101J	CERAMIC	100PF	J		
C94			CE04KW1C330M	ELECTRO	33UF	16WV		
C95 ,96			CK45FB1H222K	CERAMIC	2200PF	K		
C97			CC45FUJ1H050C	CERAMIC	5.0PF	C		
C98		*	CC45FUJ1H121J	CERAMIC	120PF	J		
C99			CC45FUJ1H330J	CERAMIC	33PF	J		
C100,101			CK45FF1H103Z	CERAMIC	0.010UF	Z		
C102			CF92FV1H332J	MF	3300PF	J		
C103			CF92FV1H103J	MF	0.010UF	J		
C104			CE04KW0J331M	ELECTRO	330UF	6.3WV		
C105			CK45FF1H103Z	CERAMIC	0.010UF	Z		
C106			CE04KW0J471M	ELECTRO	470UF	6.3WV		
C107			CE04KW1C220M	ELECTRO	22UF	16WV		
C108			CE04KW1V100M	ELECTRO	10UF	35WV		
C109			CE04KW1C220M	ELECTRO	22UF	16WV		
C110,111			CC45FSL1H150J	CERAMIC	15PF	J		
C112			CF92FV1H104J	MF	0.10UF	J		
C113			CK45FF1H103Z	CERAMIC	0.010UF	Z		
C114			CE04KW1A101M	ELECTRO	100UF	10WV		
C115			CK45FF1H103Z	CERAMIC	0.010UF	Z		
C116			CC45FSL1H101J	CERAMIC	100PF	J	KPXTE	
C117,118			CE04KW0J331M	ELECTRO	330UF	6.3WV		
C119,120			CE04KW1C330M	ELECTRO	33UF	16WV		
C121,122			CF92FV1H104J	MF	0.10UF	J		
C123,124			C90-1334-05	NP-ELEC	47UF	10WV		
C125,126			CE04KW0J331M	ELECTRO	330UF	6.3WV		
C127			CK45FF1H103Z	CERAMIC	0.010UF	Z		
C130			CK45FF1H103Z	CERAMIC	0.010UF	Z		

E: Scandinavia & Europe K: USA P: Canada
U: PX(Far East, Hawaii) T: England M: Other Areas
UE: AAFES(Europe) X: Australia

⚠ indicates safety critical components.

DP-7010

PARTS LIST

× New Parts
Parts without **Parts No.** are not supplied.
Les articles non mentionnes dans le **Parts No.** ne sont pas fournis.
Telle ohne **Parts No.** werden nicht geliefert.

Ref. No. 参照番号	Address 位置	New Parts 新	Parts No. 部品番号	Description 部品名／規格				Destination 仕向	Remarks 備考
C131,132			CF92FV1H102J	MF	1000PF	J			
C133,134			CE04KW1A101M	ELECTRO	100UF	10WV			
C135,136			CC45FSL1H330J	CERAMIC	33PF	J			
C137,138			CE04KW1A470M	ELECTRO	47UF	10WV			
C177-180			CF92FV1H102J	MF	1000PF	J			
C181,182			CK45FF1H103Z	CERAMIC	0.010UF	Z		KPXTE	
C183			CK45FF1H103Z	CERAMIC	0.010UF	Z			
C184			CF92FV1H124J	MF	0.12UF	J			
C185			CE04KW1E101M	ELECTRO	100UF	25WV			
C198			CK45FF1H103Z	CERAMIC	0.010UF	Z			
⚠ C200			C91-0647-05	CERAMIC	0.01UF	P			
C201			CC45FSL1H101J	CERAMIC	100PF	J			
C203			CF92FV1H104J	MF	0.10UF	J			
C205			CK45FF1H103Z	CERAMIC	0.010UF	Z			
⚠ C209			C91-0647-05	CERAMIC	0.01UF	P		KPXTE	
⚠ C210			C91-0647-05	CERAMIC	0.01UF	P			
CN1			E10-4001-05	FLAT CABLE CONNECTOR					
CN4			E10-1705-05	FLAT CABLE CONNECTOR					
J300	1E		E13-0483-05	PHONO JACK (LINE OUTPUT)					
J301	1E		E13-0137-05	PHONO JACK (DIGITAL OUT)					
			J11-0098-05	WIRE CLAMPER					
L1 ,2			L33-0358-05	CHOKE COIL(1UH)					
L3 -5			L33-0328-05	CHOKE COIL(100UH)					
L6 -8			L33-0358-05	CHOKE COIL(1UH)					
L9 -11			L40-2292-17	SMALL FIXED INDUCTOR(2.2UH,M)					
L12 ,13			L40-1001-17	SMALL FIXED INDUCTOR(10UH,K)					
L14			L32-0328-15	OSCILATING COIL(12UH)VCO					
L15			L39-0152-05	MATCHING COIL					
L16			L33-0328-05	CHOKE COIL(100UH)					
L17			L40-1021-14	SMALL FIXED INDUCTOR(1.0MH,K)					
⚠ L18			L79-0190-05	LINE FILTER				KPXTE	
⚠ L18			L79-0733-05	LINE FILTER				KPXTE	
L20 ,21			L40-1011-17	SMALL FIXED INDUCTOR(100UH,K)				KPXTE	
L20 ,21			L40-1021-14	SMALL FIXED INDUCTOR(1.0MH,K)				UMUE	
L22 ,23			L40-2292-17	SMALL FIXED INDUCTOR(2.2UH,M)					
L24 ,25			L40-1011-17	SMALL FIXED INDUCTOR(100UH,K)				KPXTE	
L24 ,25			L40-1021-14	SMALL FIXED INDUCTOR(1.0MH,K)				UMUE	
X1			L77-1119-05	CRYSTAL RESONATOR					
R13 ,14			R92-0393-05	RD	3.0K	J	1/2W		
R15 -18		*	RN14BK2C1331F	RN	1.33K	F	1/6W		
R19 ,20			RN14BK2C2611F	RN	2.61K	F	1/6W		
R21 ,22			RN14BK2C1101F	RN	1.10K	F	1/6W		
R23 -26			RN14BK2C1961F	RN	1.96K	F	1/6W		
R27 ,28		*	RN14BK2C4640F	RN	464.0	F	1/6W		
R29 ,30			RN14BK2C3831F	RN	3.83K	F	1/6W		
R45 ,46			RN14BK2C1000F	RN	100.0	F	1/6W		
R49			RS14KB3D101J	FL-PROOF RS	100	J	2W		
R83			RS14KB3A100J	FL-PROOF RS	10	J	1W		
R212,213			RS14KB3D8R2J	FL-PROOF RS	8.2	J	2W		
R216			RD14GB2E101J	FL-PROOF RD	100	J	1/4W		
R251-254			RN14BK2C10R0F	RN	10.0	F	1/6W		
R265,266			RN14BK2C4641F	RN	4.64K	F	1/6W		
R267-270			RN14BK2C4642F	RN	46.4K	F	1/6W		

E: Scandinavia & Europe K: USA P: Canada
U: PX(Far East, Hawaii) T: England M: Other Areas
UE: AAFES(Europe) X: Australia

⚠ indicates safety critical components.

PARTS LIST

* New Parts
Parts without **Parts No.** are not supplied.
Les articles non mentionnes dans le **Parts No.** ne sont pas fournis.
Telle ohne **Parts No.** werden nicht geliefert.

Ref. No. 参照番号	Address 位置	New Parts 新	Parts No. 部品番号	Description 部品名／規格	Destination 仕向	Remarks 備考
VR1 -4			R12-5058-05	TRIMMING POT. (100K)DAC		
VR5			R29-9020-05	POTENTIOMETER(3.3KX3)		
VR6 ,7			R12-3126-05	TRIMMING POT. (10K)F/T GAIN		
K1			S51-2074-05	MAGNETIC RELAY		
⚠ S1	1E		S40-1103-05	PUSH SWITCH (POWER TYPE)		
⚠ S2	1E		S31-2128-05	SLIDE SWITCH (POWER TYPE)	UMUE	
			2SA933S(Q,R)	TRANSISTOR		
			2SC1740S(Q,R)	TRANSISTOR		
D1 -6			S5566B	DIODE		
D7 -10			HSS104	DIODE		
D7 -10			1SS133	DIODE		
D11			S5566B	DIODE		
D12			HZS8.2N(B2)	ZENER DIODE		
D12			RD8.2ES(B2)	ZENER DIODE		
D13 -16			S5566B	DIODE		
D17 ,18			HSS104	DIODE		
D17 ,18			1SS133	DIODE		
D20			HZS5.1S(B2)	ZENER DIODE		
D20			RD5.1JS(B2)	ZENER DIODE		
D21			HZS15N(B)	ZENER DIODE		
D21			RD15ES(B)	ZENER DIODE		
D22			HZS5.1S(B2)	ZENER DIODE		
D22			RD5.1JS(B2)	ZENER DIODE		
D23			HSS104	DIODE		
D23			1SS133	DIODE		
D24 ,25			S5566B	DIODE		
D26			HZS8.2N(B2)	ZENER DIODE		
D26			RD8.2ES(B2)	ZENER DIODE		
D28			HSS104	DIODE		
D28			1SS133	DIODE		
D33			HZS5.1S(B2)	ZENER DIODE		
D33			RD5.1JS(B2)	ZENER DIODE		
D34			HSS104	DIODE		
D34			1SS133	DIODE		
D35			HZS11N(B)	ZENER DIODE		
D35			RD11ES(B)	ZENER DIODE		
D36			HZS8.2N(B2)	ZENER DIODE		
D36			RD8.2ES(B2)	ZENER DIODE		
D37			HSS104	DIODE		
D37			1SS133	DIODE		
D38			HZS15N(B)	ZENER DIODE		
D38			RD15ES(B)	ZENER DIODE		
D39			HSS104	DIODE		
D39			1SS133	DIODE		
D40			HZS8.2N(B2)	ZENER DIODE		
D40			RD8.2ES(B2)	ZENER DIODE		
D41			HSS104	DIODE		
D41			1SS133	DIODE		
D42			1SV147	VARISTOR		
D43 ,44			HSS104	DIODE		
D43 ,44			1SS133	DIODE		
D45			HZS8.2N(B2)	ZENER DIODE		
D45			RD8.2ES(B2)	ZENER DIODE		
D46			HSS104A	DIODE		

E: Scandinavia & Europe K: USA P: Canada
U: PX(Far East, Hawaii) T: England M: Other Areas
UE: AAFES(Europe) X: Australia

⚠ indicates safety critical components.

PARTS LIST

* New Parts
Parts without **Parts No.** are not supplied.
Les articles non mentionnes dans le **Parts No.** ne sont pas fournis.
Telle ohne **Parts No.** werden nicht geliefert.

Ref. No. 参照番号	Address 位置	New Parts 新	Parts No. 部品番号	Description 部品名／規格	Destination 仕向	Remarks 備考
D46			1SS131	DIODE		
D47			S5566B	DIODE		
D48 -50			HSS104	DIODE		
D48 -50			1SS133	DIODE		
D51			HSS104A	DIODE		
D51			1SS131	DIODE		
D52			HZS11N(B)	ZENER DIODE		
D52			RD11ES(B)	ZENER DIODE		
D54 -57			HSS104	DIODE		
D54 -57			1SS133	DIODE		
IC1			TC74HC00P	IC(QUAD 2-INPUT NAND GATE)		
IC2 -5			NJM4565D	IC(OP AMP X2)		
IC6			M5218P	IC(OP AMP X2)		
IC7 ,8			PCM58P	IC(DA CONVERTER)		
IC9			M5218P	IC(OP AMP X2)		
IC10			CXA1244S	IC(SERVO SIGNAL PROCESSOR)		
IC11			NJM4558D	IC(OP AMP X2)		
IC12			M5218P	IC(OP AMP X2)		
IC13			TC74HC04P	IC(HEX INVERTER)		
IC14			SM5813AP	IC(8FS DIGITAL FILTER)		
IC15			NJM4558D	IC(OP AMP X2)		
IC16			UPD75212ACW-052	IC(MICROPROCESSOR)		
IC18			CXK5816SP-15L	IC(2KXB RAM)		
IC19			TC17G008AF-8060	IC(DPAC)		
IC20			CXD1125Q	IC(DIGITAL SIGNAL PROCESSOR)		
IC20			CXD1125QZ	IC(DIGITAL SIGNAL PROCESSOR)		
IC22			NJM4558D	IC(OP AMP X2)		
Q1			2SB941	TRANSISTOR		
Q2			2SC3940A	TRANSISTOR		
Q3			2SD1266(Q,P)	TRANSISTOR		
Q4			2SA1534A	TRANSISTOR		
Q5			DTC124EN	DIGITAL TRANSISTOR		
Q6 ,7			2SK246(Y,GR)	FET		
Q8			2SA733(A)(Q,P)	TRANSISTOR		
Q8			2SA933S(Q,R)	TRANSISTOR		
Q9			2SC1740S(Q,R)	TRANSISTOR		
Q9			2SC945(A)(Q,P)	TRANSISTOR		
Q10			2SA733(A)(Q,P)	TRANSISTOR		
Q10			2SA933S(Q,R)	TRANSISTOR		
Q11			2SA1534A	TRANSISTOR		
Q12			2SA733(A)(Q,P)	TRANSISTOR		
Q12			2SA933S(Q,R)	TRANSISTOR		
Q13 ,14			2SA954(L,K)	TRANSISTOR		
Q15 ,16			2SC1740S(Q,R)	TRANSISTOR		
Q15 ,16			2SC945(A)(Q,P)	TRANSISTOR		
Q17			DTA124EN	DIGITAL TRANSISTOR		
Q18			2SD1266(Q,P)	TRANSISTOR	UMUEXT	
Q18			2SD1266(Q,P)	TRANSISTOR	E	
Q18			2SD882(Q,P,E)	TRANSISTOR	KP	
Q19 ,20			2SC2003(L,K)	TRANSISTOR		
Q21 ,22			2SA954(L,K)	TRANSISTOR		
Q30			2SA954(L,K)	TRANSISTOR		
Q31			2SC3666	TRANSISTOR		
Q32			2SA1426	TRANSISTOR		
Q33 ,34			2SC2878(B)	TRANSISTOR		

E: Scandinavia & Europe K: USA P: Canada
U: PX(Far East, Hawaii) T: England M: Other Areas
UE: AAFES(Europe) X: Australia

⚠ indicates safety critical components.

DP-7010

PARTS LIST

* New Parts
Parts without **Parts No.** are not supplied.
Les articles non mentionnes dans le **Parts No.** ne sont pas fournis.
Telle ohne **Parts No.** werden nicht geliefert.

Ref. No. 参照番号	Address 位置	New Parts 新	Parts No. 部品番号	Description 部品名／規格	Destination 仕向	Remarks 備考
Q35			DTA124EN	DIGITAL TRANSISTOR		
Q36			2SB772(Q,P,E)	TRANSISTOR		
Q37			2SC2003(L,K)	TRANSISTOR		
Q38 ,39			2SD1266(Q,P)	TRANSISTOR		
Q40			2SC2003(L,K)	TRANSISTOR		
Q41			STA341M	TRANSISTOR		
A1	1E		W02-0936-05	TRANSMITTING ASSY		
MECHANISM ASS'Y (X92-1300-02)						
1	1A		A11-0278-03	SUB CHASSIS		
2	2B	*	D02-0086-08	TURNTABLE PLATTER		
3	1A		D10-2227-03	SLIDER		
4	2B	*	D10-2249-04	ROD		
5	2A		D13-0722-04	GEAR		
6	2A		D13-0723-04	GEAR		
7	2A		D13-0724-03	GEAR		
8	3B	*	D13-0745-08	GEAR		
9	2B	*	D13-0746-08	GEAR		
10	2B	*	D13-0747-04	GEAR		
12	2A		D16-0191-04	BELT		
15	2B	*	F07-0546-08	COVER		
16	1A	*	F19-0593-04	BLIND PLATE		
17	3B	*	F31-0182-04	REINFORCING HARDWARE		
19	2B	*	G01-2308-08	COMPRESSION SPRING		
20	2A		G02-0493-04	FLAT SPRING (L)		
21	2B		G02-0494-04	FLAT SPRING (R)		
22	3B		G02-0495-08	FLAT SPRING		
23	2B,3B	*	G01-2380-08	COMPRESSION SPRING (GRN)		
24	2B	*	G01-2381-08	COMPRESSION SPRING (SLV)		
25	3A		J02-0386-04	FOOT		
27	1A		J11-0130-03	CLAMPER		
28	2A		J11-0134-05	WIRE CLAMPER		
29	2B	*	J19-3165-03	HOLDER		
30	2B,3B	*	J02-1027-05	INSULATOR		
31	3B	*	J42-0170-08	BUSHING		
32	2A	*	J90-0617-03	GUIDE		
33	2A	*	J90-0618-03	GUIDE		
34	3B	*	J90-0623-08	RAIL		
35	2B	*	J90-0624-08	GUIDE		
36	1B	*	J91-0372-05	PICKUP		
37	1B		J99-0053-01	TRAY		
40	2A		N19-0891-04	FLAT WASHER		
41	1A		N19-1170-04	FLAT WASHER		
42	2B	*	N19-1179-05	FLAT WASHER		
A	1A,2A		N09-1898-15	MACHINE SCREW		
B	3B	*	N09-2613-05	SEMS (TAPTITE SCREW)		
C	2A	*	N09-2627-05	MACHINE SCREW		
D	3B	*	N09-2628-05	MACHINE SCREW		
R	2B		N09-1522-05	SET SCREW (3X8)		
S1	3B	*	S46-1122-05	LEAF SWITCH		
S2	3A		S33-2060-05	LEVER ROTARY SWITCH		

E: Scandinavia & Europe K: USA P: Canada
U: PX(Far East, Hawaii) T: England M: Other Areas
UE: AAFES(Europe) X: Australia

⚠ indicates safety critical components.

DP-7010

PARTS LIST

* New Parts
Parts without Parts No. are not supplied.
Les articles non mentionnes dans le Parts No. ne sont pas fournis.
Teile ohne Parts No. werden nicht gellefert.

Ref. No. 参照番号	Address 位置	New Parts 新	Parts No. 部品番号	Description 部品名／規格	Destination 仕向	Remarks 備考
45	3A		T42-0483-05	DC MOTOR		
46	3B	*	T42-0495-05	DC MOTOR		
47	3B	*	T42-0496-05	DC MOTOR		
48	3B	*	T42-0497-08	MOTOR ASSY		
49	1A		T50-1036-04	YOKE		
51	1A		T99-0222-05	MAGNET		

E: Scandinavia & Europe K: USA P: Canada
U: PX(Far East, Hawaii) T: England M: Other Areas
UE: AAFES(Europe) X: Australia

⚠ indicates safety critical components.

SPECIFICATIONS

[Format]

Type: ..... Compact disc player
Read system: ..... Non-contact optical pickup
Rotational speed: ..... About 200 to 500 rpm

[Audio]

Frequency responce: ..... 4 Hz ~ 20 kHz
Signal-to-noise ratio: ..... more than 108 dB
Total harmonic distortion: ..... 0.0025% at 1 kHz
Channel separation: ..... more than 106 dB at 1 kHz
Wow flutter: ..... Below measurable limit
Output
LINE (FIXED): ..... 2.0 V
(VARIABLE): ..... 0 ~ 2.0 V
DIGITAL (COAXIAL): ..... 0.5 V p-p, 75 ohms
(OPTICAL): ..... - 15 dBm ~ - 21 dBm
Headphone jack: ..... 60 mW (8 ohms)

[General]

Power consumption: ..... 20 W
Maximum dimensions: ..... W: 440 mm (17-5/16")
H: 111 mm (4-3/8")
D: 311 mm (12-1/4")
Weight: ..... 5.9 kg (13 lb)

[Wireless remote control unit]

Model: RC-P8010
Type: ..... Infrared pulse
Power supply: ..... DC 3 V (two R6/AA batteries)
Maximum Dimensions: ..... W: 64 mm (2-1/2")
H: 18 mm (11/16")
D: 176 mm (6-15/16")
Weight: ..... 121 g (0.27 lb) (with batteries)

Note:
KENWOOD follows a policy of continuous development. For this reason specifications may be changed without notice.

Note :

Component and circuitry are subject to modification to insure best operation under differing local conditions. This manual is based on, the U.S.A. (K) standard, and provides information on regional circuit modification through use of alternate schematic diagrams, and information on regional component variations through use of parts list.

KENWOOD CORPORATION
Shinonogi Shibuya Building, 17-5, 2-chome Shibuya, Shibuya-ku, Tokyo 150, Japan

KENWOOD U.S.A. CORPORATION
2201 East Dominguez Street, Long Beach, CA 90810 :
550 Clark Drive, Mount Olive, NJ 07828, U.S.A

KENWOOD ELECTRONICS CANADA INC.
P.O. Box 1075 959 Gana Court, Mississauga, Ontario, Canada L4T 4C2

KENWOOD ELECTRONICS BENELUX N.V.
Mechelsesteenweg 418 B-1930 Zaventem, Belgium

KENWOOD ELECTRONICS DEUTSCHLAND GMBH
Rembrucker-Str. 15, 6056 Heusenstamm, West Germany

TRIO-KENWOOD FRANCE S.A.
Hi-Fi・VIDEO・CAR Hi-Fi
13, Boulevard Ney, 75018 Paris, France

TRIO-KENWOOD U.K. LTD.
17 Bristol Road, The Metropolitan Centre, Greenford, Middx. UB6 8UP England

KENWOOD ELECTRONICS AUSTRALIA PTY. LTD.
4E Woodcock Place, Lane Cove, N.S.W. 2066, Australia

KENWOOD & LEE ELECTRONICS, LTD.
Wang Kee Building, 4th Floor, 34-37, Connaught Road, Central, Hong Kong